FUSECO 2021/2022

PROTECTION RELAYS

When Safety Matters

Protection Relays

Arc Flash Detection

Earth Leakage Relays

Neutral Earthing Resistor Monitors

Motor Protection

Feeder Protection

Phase Voltage Indicator

Trailing Cable Protection

Insulation Monitor

FUSECO

Arc Flash Relay Comparison Guide

Reliable Operation with Built In Redundancies

When you are entrusting a safety device to protect equipment from catastrophic damage, it is important to know that it will operate as expected. Littelfuse Arc Flash Relays do this by having built in redundancies and health monitors, making maintenance and installation tasks faster, more efficient and helping to minimise downtime.

	AF0100	AF0500	PGR-8800
Redundant Internal Trip Path • Two internal trip paths for added reliability—if the microprocessor trip path fails, the backup analog trip path will seamlessly take over, sending an alarm notification to operators • Backup analog trip path initializes very quickly upon power up, ensuring protection is enabled while energizing the system when hazard risk is higher	✓	✓	✓
Health Monitoring • Continuously monitors connection to trip coil to ensure path is intact LED indication of sensors' "Ready" or "Tripped" status on sensor and relay • Sensors are durable enough to withstand a detected arc flash event	✓	✓	✓
Reliable Light Detection • Two types of light sensors (point and fibre optic) for different applications • Adjustable light level and wide angle detection add flexibility • Durable and flexible sensor design eliminates breakage and re work	✓	✓	✓
High Speed (<1 ms) Trip • Rapidly initiate the removal of power to reduce the incident energy of the arc flash		✓	✓
Upstream Tripping • Ability to trip upstream device if the local breaker fails to clear the fault		✓	✓
Data Logging • Quickly assess the factors that led to a trip in order to get back online quickly		✓	✓
Optional Current Detection for Fault Verification • Avoid nuisance tripping with current supervised arc flash trips • Phase Current Transformers for overcurrent detection • Two user defined definite time overcurrent protection levels and times			✓
Tie Breaker Tripping • Ability to trip both incoming feeder and tie breaker when arc is detected in one section of a switchboard • Affected part of the switchboard is isolated from the non affected part		✓	
Zone Tripping • Ability to trip 2 separate zones with 1 relay • Sensor zone assignment through simple PC configuration and/or digital inputs and outputs		✓	

AF0100 Series

Arc Flash Relay

Description

The AF0100 Series Arc Flash Relay is a cost effective solution that reduces arc fault damage by detecting the light from an arc flash and rapidly tripping the feeder breaker. Two remote light sensors can be connected to one relay and multiple AF0100 and/or AF0500 relays can be connected to monitor additional sensors, providing complete coverage for a wide range of applications. The compact, DIN rail or surface mountable body makes this an ideal solution for equipment manufacturers.

Two isolated Form C contacts are provided for applications with multiple devices that must be tripped. This is especially useful for generator applications where the generator and breaker need to be tripped in case of an arc flash.

The AF0100 accepts PGA-LS10 point sensors and PGA-LS20/ PGA-LS30 fibre optic sensors in any combination. Sensor health is continuously monitored to ensure failsafe operation. A solid state redundant trip circuit provides an internal failsafe mechanism and fast arc flash response during power up.

Front panel and sensor LEDs indicate sensor health and fault location.

Features and Benefits

FEATURES	BENEFITS
Compact	Fits into a wide range of arc flash applications
Two optical sensor types	Point sensors or fibre optic sensors can be used in any combination for coverage flexibility
Dual sensor inputs	One relay can monitor two arc flash sensors
Discrete wire networking	Multiple AF0100 or AF0500 units can be interconnected to form a system
Fail safe system	Continuous monitoring of optical sensors and inputs ensures protection
USB Interface	Configuration software is easy to use with no drivers or software installation
Unit health	Ensures continuous protection with self diagnostic and remote unit healthy indication
LED Indication	Trip and sensor status indication both on relay and sensors

ORDER NO.	DESCRIPTION
AF0100-00	Arc Flash Relay, Universal Supply

ACCESSORIES	REQUIREMENTS
PGA-LS10	Required*
PGA-LS20, PGA-LS30	Required*

*At least one sensor is required. However, the exact number of sensors for proper coverage depends on the application.

Simplified Circuit Diagram

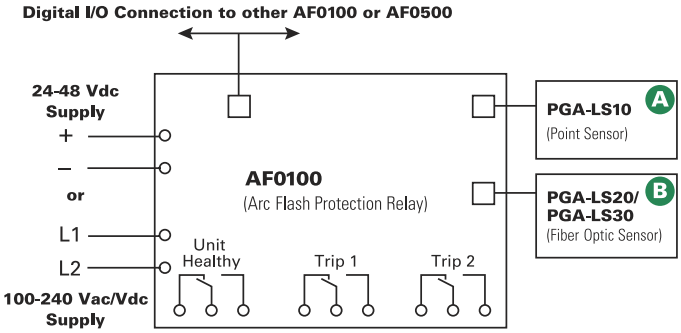

Specifications

Input Voltage	
AF0100-00	100–240 VAC/VDC, 24–48 VDC
Dimensions	**H** 90mm **W** 128mm **D** 60mm
Trip, Error Relays	Form C, 250 VAC/30 VDC, 6 A resistive
Trip Time	5ms (typical)
Sensitivity	10–25 klux programmable
Mounting	Surface, DIN rail
Operating Temperature	–40°C to +70°C
Certifications	UL Listed (UL 508), CE, RCM, FCC
Warranty	5 years

Accessories

PGA-LS10 Point Sensor
Line of sight light sensor detects an arc as small as 3kA within a 2 metre half sphere. Sensor health and trip indication.

PGA-LS20/PGA-LS30
Fibre Optic Sensor 360° light sensor for tricky installations with many shadows or to run along bus bars. Sensor health and trip indication.

FUSECO

AF0500 Series

Arc Flash Relay

Description

The AF0500 is a microprocessor based Arc Flash Relay that limits arc fault damage by detecting the light from an arc flash and rapidly tripping the feeder breaker. The unit is well suited for switchgear, transformer and power converter applications.

Sensors, inputs and connections are health monitored to ensure fail safe operation. A secondary solid state trip circuit provides a redundant trip path. A USB port is used for configuration and access to event logs.

AF0500 includes an Ethernet interface and supports Modbus® TCP communication. Zone tripping, upstream breaker tripping and tie breaker tripping applications can be easily configured.

A number of control inputs allows interconnection of multiple AF0500 units to form a system.

Optical Sensors

The AF0500 accepts both PGA-LS10 point sensors and PGA-LS20/ PGA-LS30 fibre optical sensors. Thus any combination of fibre or point sensors is supported.

For fast fault location, front panel and sensor LEDs indicate sensor health and which sensor detected an arc fault.

Sensor Placement

The AF0500 Arc Flash Relay and sensors are easily installed in retrofit projects and new switchgear with little or no reconfiguration. Simple applications work straight out of the box with no need of PC configuration. More complex systems with multiple power sources are configured using the relay's built in USB interface software.

Generally, it is recommended to mount 1 or 2 sensors per cubicle to cover all horizontal and vertical bus bars, breaker compartments, drawers, and anywhere that there is a risk for an arc fault. Threading a fibre optic sensor through the cabinets and in areas where point sensor coverage is uncertain results in complete coverage and an added level of redundancy. Even if policy is to only work on de energised systems, all maintenance areas should be monitored to prevent potential damage and additional cost.

Simplified Circuit Diagram

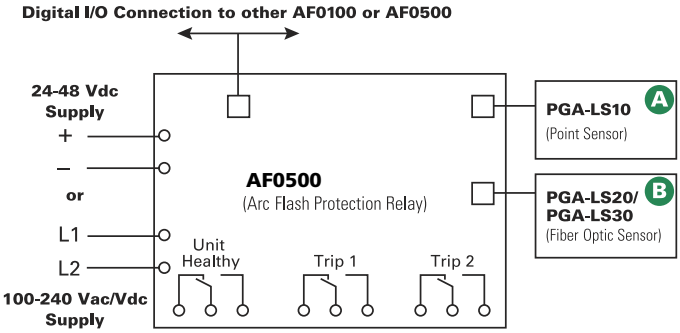

Ordering Information

ORDER NUMBER	DESCRIPTION
AF0500-00	Arc Flash Relay, Universal Supply

ACCESSORIES	REQUIREMENTS
PGA-LS10	Required*
PGA-LS20, PGA-LS30	Required*
PGA-1100	Optional

*At least one sensor is required. However, the exact number of sensors for proper coverage depends on the application.

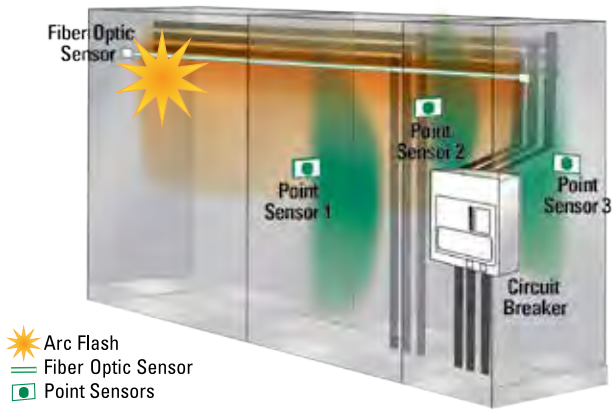

Features & Benefits

FEATURES	BENEFITS
4 arc sensor inputs	Supports both point and fibre sensors
Arc flash trip time <1ms	Limits arc flash damage and risk of injury
2 IGBT high speed trip outputs	Supports applications such as upstream breaker tripping or tie breaker tripping
Universal Power Supply	100–240 VAC, 24–48 VDC, or 110–250 VDC supply
Fail safe system	Continuous monitoring of optical sensors and inputs ensures protection
LED indication (on unit and each sensor)	Trip and sensor status indicated both on relay and sensors
Discrete wire networking	Multiple AF0500 units can be interconnected to form a system
USB interface	Data logging and configuration software uses a USB interface with no drivers or software installation
Data logging	On board event recorder for system diagnostics (2048 log lines)
Ethernet interface	Modbus® TCP communication

Wiring Diagram

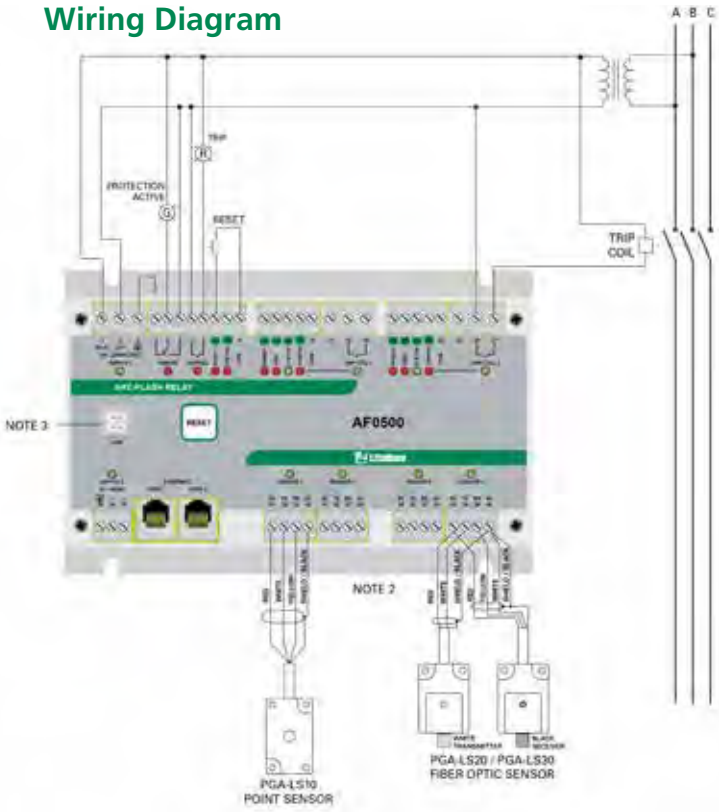

Specifications

Power Supply	
Universal	100 to 240 VAC (+10%, –15%) 50/60 Hz, 20 VA, 110 to 250 VDC (+10%, –20%) 8 W
Low Voltage	24 to 48 VDC (+10%, –20%), 4 W
Sensor Inputs	4 light sensor inputs for PGA-LS10, PGA-LS20 and PGA-LS30 sensors
Trip Outputs	2 IGBT switches
UL Rating	120/240 VAC, 1800 VA, 0.75 A maximum continuous, 125/250 VDC, 138 VA, 0.75 A maximum continuous
Supplemental Rating	
Make/Carry	30A for 0.2s
Voltage Rating	24 to 300 VAC, 24 to 300 VDC
Current Rating	20A for 2s, 10A for 5s
Communication	Ethernet, 2 ports with internal Ethernet switch, Modbus® TCP
Dimensions	**H** 130mm **W** 200mm **D** 54mm
Operating Temp.	–40°C to +70°C
Approvals	UL Listed (UL508), CE, RCM, FCC, CSA
Warranty	5 years
Mounting	Surface, DIN (with optional D0050 adapter clips)
Conformal Coating	Available upon request

Accessories

PGA-LS10 Point Sensor
Line of sight light sensor detects an arc as small as 3kA within a 2 metre half sphere. Includes sensor health and trip indication

PGA-LS20/PGA-LS30 Fibre Optic Sensor
360° light sensor to run along bus bars. Sensor health and trip indication.

PGA-1100 Diode Logic Unit
This module allows multiple Arc Flash Relays to trip a common breaker, for example a tie breaker.

FUSECO

PGR-8800 Series

Arc Flash Relay

Simplified Circuit Diagram

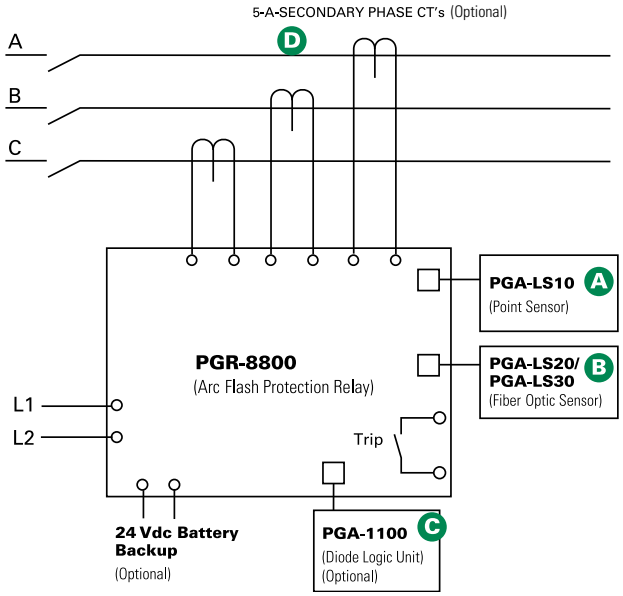

Ordering Information

ORDER NUMBER	DESCRIPTION
PGR-8800-00	Arc Flash Relay, Universal Supply

ACCESSORIES	REQUIREMENTS
PGA-LS10	Required*
PGA-LS20/PGA-LS30	Required*
PGA-1100	Optional
Current Transformer	Optional

*At least one sensor is required. However, the exact number of sensors for proper coverage depends on the application.

Description

The PGR-8800 is a microprocessor based relay that limits arc fault damage by detecting the light from an arc flash and rapidly tripping. Phase current transformer inputs are provided for current constrained arc flash protection and, when so equipped, a programmable definite time overcurrent function can be enabled. An optical sensor on the PGR-8800 and adjustable trip level reduce the chance of nuisance tripping by setting a threshold for ambient light. Sensors, inputs, and connections are monitored to ensure fail safe operation. A secondary solid state trip circuit provides a redundant trip path. A USB port is used for configuration and access to event logs and graphs.

Optical Sensors

The PGR-8800 accepts both PGA-LS10 and PGA-LS20/PGA-LS30 optical sensors, designed to collect light over a wide angle and with high sensitivity. For fast fault location, front panel and sensor LED's indicate sensor health and which sensor detected an arc fault.

Sensor Placement

The PGR-8800 Arc Flash Relay and sensors are easily installed in retrofit projects and new switchgear with little or no reconfiguration. Even elaborate systems with multiple power sources take minutes to configure using the relay's built in USB interface software.

Generally, it is recommended to mount 1 or 2 sensors per cubicle to cover all horizontal and vertical bus bars, breaker compartments, drawers, and anywhere that there is potential for an arc fault. Threading a fibre optic sensor through the cabinets and in areas where point sensor coverage is uncertain results in complete coverage and an added level of redundancy. Even if policy is to only work on de energised systems, all maintenance areas should be monitored to prevent potential damage and additional cost. At least one sensor should have visibility of an arc fault if a person blocks the other sensor(s).

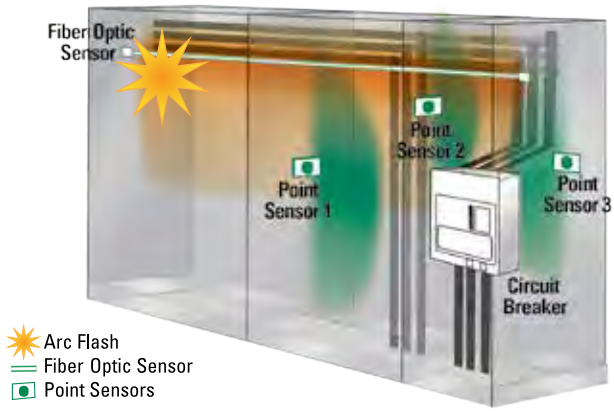

Features & Benefits

FEATURES	BENEFITS
Arc flash trip time	<1ms Limits arc flash damage and risk of injury
Multiple sensors (up to 24)	Single module can monitor 6 sensors. Up to 4 PGR-8800 units can be linked into one system
Fail safe system	Continuous monitoring of optical sensors and inputs ensures protection
Redundant trip circuit	Solid state backup arc detection circuit adds a second layer of safety
Adjustable light sensitivity	Allows for operation in bright environments and maximum sensitivity in dark environments
LED indication (on unit and each sensor)	18 LEDs provide at a glance status for module and I/O state
Current detection	Phase CT inputs provide overcurrent protection and prevent nuisance trips
Optical detection	Point and fibre optic sensors provide wide detection area with sensor health trip indication
Digital inputs (6)	Two each: remote trip, inhibit, and reset inputs
Service mode	Allows for system test without tripping
Trip coil contact	Solid state 24–300 VDC/24–300 VAC IGBT
Indication contacts	Form C and status outputs
USB interface	Data logging and configuration software uses a USB interface with no drivers or software installation
Built in sensor	Can be used in single sensor systems, as a seventh sensor, and for calibration
Universal power supply/ Battery backup	100–240 VAC, 14–48 VDC, or 110–250 VDC supply accepted. Ability to charge and run off an external, user supplied 24 VDC battery.
Data logging	On board event recorder helps with system diagnostics
Modbus	Remotely view measured values, event records & reset trips
Upstream Tripping	Ability to trip upstream device if the local breaker fails to clear the fault

Wiring Diagram

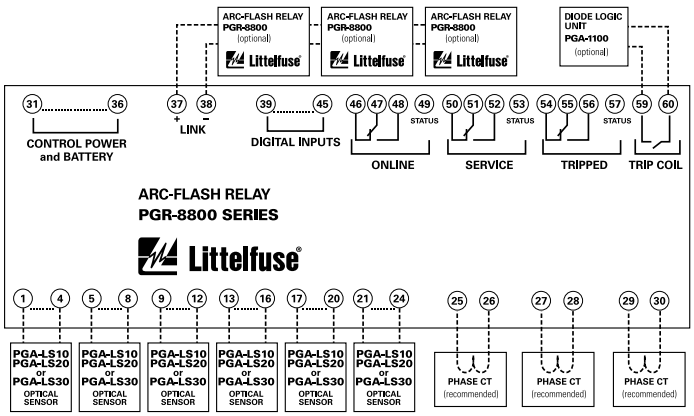

Specifications

IEEE Device Numbers	Overcurrent (50), Arc Flash (AFD)
Input Voltage	100–240 VAC, 14–48 VDC, and 110–250 VDC
Dimensions	**H** 130mm **W** 200mm **D** 54mm
Optical Trip Settings	9–25 klux, 800 µs-20 s
Current Trip Setting (A)	Programmable
Indication Contact Mode	Fail safe
Trip Coil Voltage(1)	24–300 VDC, 24–300 VAC
Trip Coil Contact Mode	Selectable fail safe or non fail safe
Redundant Trip Circuit	Standard feature
Input Monitoring	Standard feature
Trip, Reset, Service Buttons	Standard feature
Expandable System	Link up to 4 PGR-8800 units
Approvals	UL Listed (UL508), CE, RCM, FCC, CSA
Warranty	5 years
Mounting	DIN (with D0050 adapter clips), Surface
Conformal Coating	Available upon request

Accessories

PGA-LS10 Point Sensor
Line of sight light sensor detects an arc as small as 3kA within a 2 metre half sphere. Sensor health and trip indication.

PGA-LS20/PGALS30
Fibre Optic Sensor 360° light sensor for tricky installations with many shadows or to run along bus bars. Sensor health and trip indication.

PGA-1100 Diode Logic Unit
This module allows multiple PGR-8800 relays to trip the same breaker, for example an upstream or a tie breaker.
Dimensions: **H** 80mm **W** 20mm **D** 70mm

Current Transformers
Eliminate nuisance arc flash trips and use for overcurrent protection.

FUSECO

EL731 Series

AC/DC Sensitive Earth Leakage Relay

Description

The EL731 is a microprocessor based AC/DC Sensitive Earth Leakage Relay that offers complete coverage for all frequencies from 0 to 6,000 Hz. Two CT's are required for the entire frequency range, or one CT can be used for only low or high frequency detection. An RTD/PTC sensor input allows over temperature protection for a motor or drive. The EL731 offers metering, password protected alarm and trip settings and optional network communications. It is primarily used to add low level ground fault protection to variable speed drives, and to dc circuits. The EL731 relay is specifically designed to be compliant to AS/NZS 2081.6:2011 (see ordering information).

Simplified Circuit Diagram

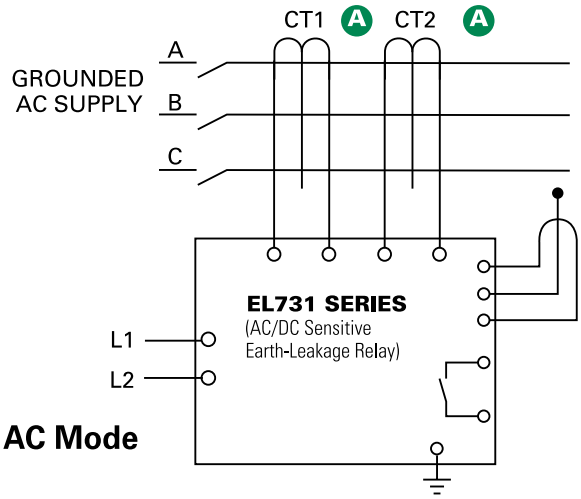

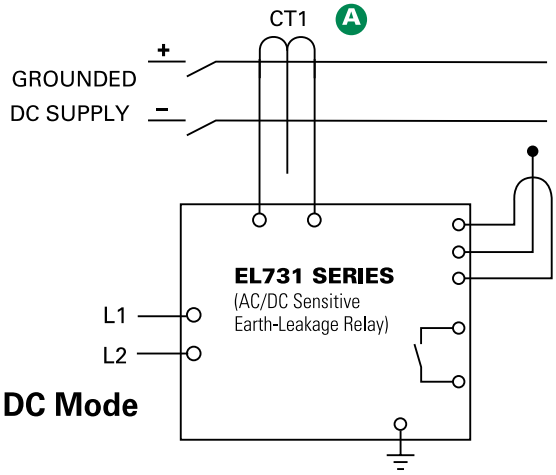

Ordering Information

ORDER NUMBER		POWER SUPPLY	COMMS		COMPLIANCE	
EL731	–	**X**	**X**	–	**X**	**0**
EL731		0 = 120/240 VAC/VDC 1 = 48 VDC & 24 VAC 2 = 24 VDC	0 = None 1 = DeviceNet ™ 2 = Profibus ® 3 = EtherNet/IP ™ 4 = Modbus ® TCP		1 = AS/NZS 2081:2011 Compliance (fail safe output contacts) 0 = AS/NZS 2081:2002 compliance (selectable fail safe output contacts)	

ACCESSORIES	REQUIREMENTS
EFCT Series CT	One Required
AC700-CUA Series Com. Unit	Optional
AC700-SMK Surface Mount Kit	Optional
AC700-CVR-00 Watertight Cover (IP66) for Panel Mount Applications	Optional
PGA-0520 Analog Meter	Optional

Accessories

EFCT Series Earth Fault Current Transformer
Required zero sequence current transformer specifically designed for low level detection.

AC700-CUA Series
Communication Adapter Optional network interface and firmwareupgrade communications adapters field install in EL731.

AC700-SMK DIN rail & Surface mount Adapter
EL731 plugs into adapter for back plane mounting.

Features & Benefits

FEATURES	BENEFITS
Adjustable pickup (30–5,000 mA)	Adjustable trip setting provides a wide range of low level protection and system coordination
Frequency range (0–90 Hz, 20–6,000 Hz)	Operate in either AC or DC mode or both. Use single or combined ranges. Separate metering
32 char OLED display	Earth leakage metering, setup and programming
Local LED indication	Visual Trip, Alarm, CT connection indication
CT Loop monitoring	Alarms when CT is not connected
Analog output (4–20 mA)	Connect to DCS. Allows connection to an optional meter (PGA-0520) or control system
Adjustable time delay	Adjustable trip delay for quick protection and system coordination
Alarm and trip settings	Detect a deteriorating condition before damage occurs
Temperature sensor input	Drive or motor temperature protection
Output contacts	3 programmable: Operate 2 alarm and 1 trip circuit
Network communication	Optional connection to plant network
Harmonic filtering	Eliminates nuisance tripping due to harmonic noise
Microprocessor based	No required calibration saves maintenance cost
Universal power supply	Provides flexibility for numerous applications

Wiring Diagram

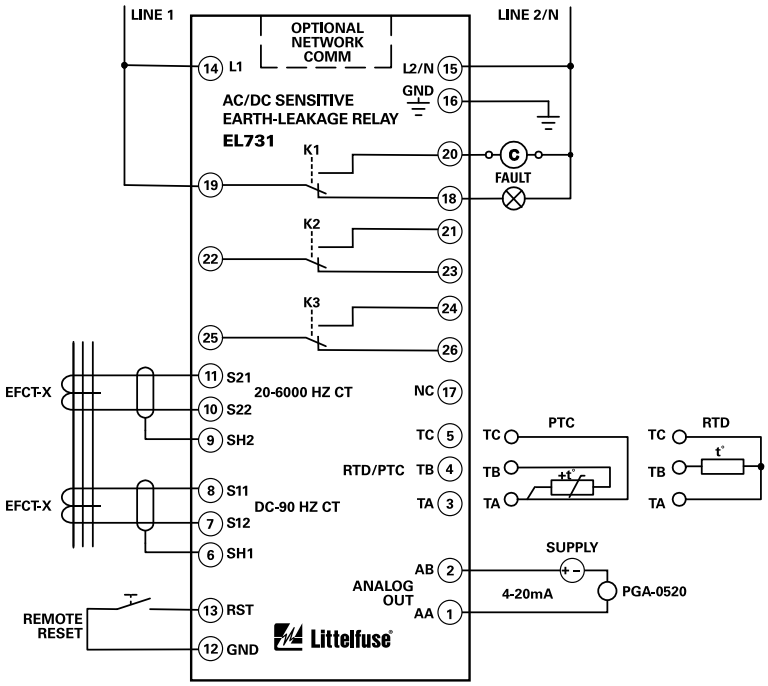

Specifications

IEEE Device Numbers	AC ground fault (50G/N, 51G/N), DC ground fault (79G), PTC overtemperature (49), RTD temperature (38, 49)
Supply Voltage	120/240 VAC/VDC, 24 VDC, 48 VDC/24 VAC
Trip Level Settings	30–5,000mA AC and DC
Alarm Level Settings	30–5,000mA AC and DC
Trip Delay	0.05–2s
Output Contacts	3 Form C (programmable)
Contact Operating Mode	Fail safe & non fail safe
Reset	Front panel and remote
Freq. Response, CT1	0–90 Hz
Freq. Response, CT2	20–6,000, 190–6,000, 20–90, 20–3,000 Hz; selectable
Current Transformer	EFCT-x series
CT Detection	Open & short detection
Terminals	Plug in, wire clamping, 24 to 12 AWG (0.2–2.5 mm^2)
Communications	EtherNet/IP™, DeviceNet™, Profibus®, Modbus® TCP (optional)
Analog Output	4–20mA (selectable 0–5 A or 0–100% trip level setting)
Conformal Coating	Standard feature
Dimensions	**H** 48mm **W** 96mm **D** 129mm
Approvals	UL Listed (E340889), CSA, RCM (Australia), CE
Warranty	5 years
Mounting	Panel; Surface and DIN (with optional AC700-SMK)

FUSECO

SE-701 Series

Earth Leakage Relay

Simplified Circuit Diagram

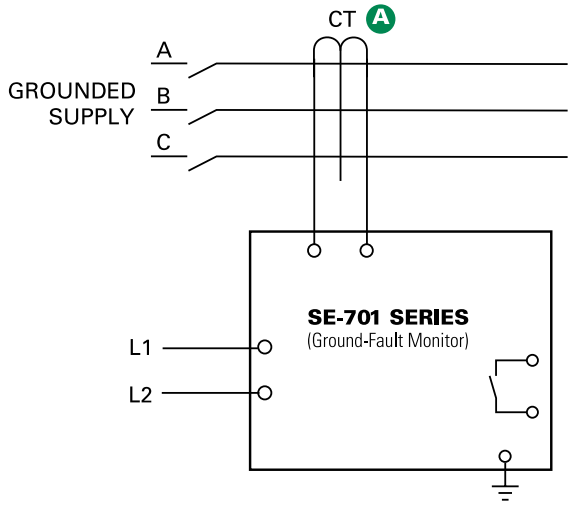

Ordering Information

ORDER NUMBER	POWER SUPPLY
SE-701-OU	120/240 VAC/VDC
SE-701-OD	12/24 VDC
SE-701-OT	48 VDC
SE-701-O3	24 VAC

ACCESSORIES	REQUIREMENT
Current Transformer	Required
PGA-0500	Optional
PMA-60	Optional
SE-EFVC Voltage Clamp	Optional

Description

The SE-701 is a microprocessor based earth leakage relay for resistance and solidly grounded systems. In addition to common systems, it is uniquely suited for use on systems with significant harmonic content. The SE-701 can provide main plant protection, feeder level protection, or individual load protection. Proper current transformer selection provides the desired pickup range. The output contacts can be connected for use in protective tripping circuits or in alarm indication circuits. The analog output can be used with a PLC or a meter.

Features & Benefits

FEATURES	BENEFITS
Adjustable pickup (1–99%)	Trip setting based on input CT primary, allows use with any CT. Minimum 50 mA with EFCT Series.
Adjustable time delay (50ms–2.5s)	Adjustable trip delay allows quick protection and system coordination
Output contacts	Form A and Form B ground fault output contacts for operation of separate annunciation and trip circuits
Analog output (0–5 V)	Allows for connecting an optional meter (PGA-0500) or a control system
CT Loop monitoring	Alarms when CT is not connected
Selectable DFT or peak detection filtering	Compatible with variable speed drives
Harmonic filtering	Eliminates nuisance tripping
Non volatile trip memory	Retains trip state while de energised to simplify troubleshooting
Microprocessor based	No calibration required, saves on maintenance cost
Universal power supply	Allows operation in application where one side of PT is faulted, provides flexibility for numerous applications

Accessories

Ground Fault Current Transformer
Required current transformer model depends on application. We offer a variety of sensitive CT's with 5A and 30A primaries.

PGA-0500 Analog % Current Meter
Optional panel mounted analog meter displays ground fault current as a percentage of the CT primary rating.

Specifications

IEEE Device Numbers	Ground fault (50G/N, 51G/N)
Input Voltage	See ordering information
Dimensions	**H** 75mm **W** 55mm **D** 115mm
Trip Level Settings	1–99% CT Primary Rating
Trip Time Settings	0.05–2.5 s
Contact Operating Mode	Selectable fail safe or non fail safe
Harmonic Filtering	Standard feature
Test Button	Standard feature
Reset Button	Standard feature
CT Loop Monitoring	Standard feature
Output Contacts	Isolated Form A and Form B
Approvals	CSA certified, UL Listed (E340889), CE (European Union), C Tick (Australian)
Analog Output	0–5V
Conformally coated	Consult factory
Warranty	5 years
Mounting	DIN, Surface (standard) Panel (with PMA-55 or PMA-60 adapter)

SE-703 Series

Earth Leakage Relay

Simplified Circuit Diagram

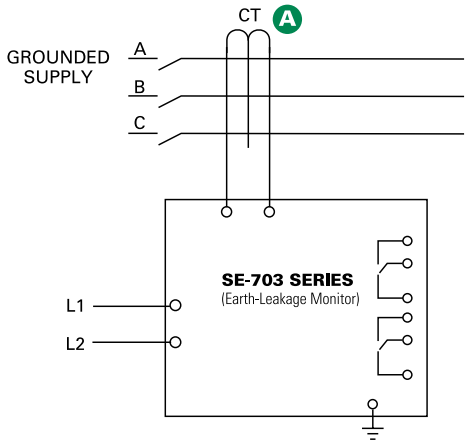

Ordering Information

ORDER NUMBER	–		POWER SUPPLY			
SE-703	–	**0**	X	–	**0**	X
SE-703	–	**0**	U = 120/240 VAC/VDC D = 12/24 VDC T = 48 VDC 3 = 24 VAC	–	**0**	0 = AS/NZS 2081:2011 Compliance (fail safe output contacts) 2 = AS/NZS 2081:2002 compliance (selectable fail safe output contacts)

ACCESSORIES	REQUIREMENT
EFCT Series	Required
PGA-0500	Optional
PMA-60	Optional
SE-EFVC Voltage Clamp	Optional

Description

The SE-703 is a microprocessor based earth leakage relay for resistance and solidly earthed systems. It offers sensitive earth fault detection as low as 25mA and can be used on systems with significant harmonic content. The SE-703 provides feeder level protection or individual load protection. The output contacts can be connected for use in protective tripping circuits or in alarm indication circuits. The analog output can be used with a PLC or a meter. The SE-703 is specifically designed to be AS/NZS 2081 compliant to either 2011 or 2002 (see ordering options).

Features & Benefits

FEATURES	BENEFITS
Adjustable pickup (25–500mA)	Adjustable trip setting provides a wide range of low level protection and system coordination
Adjustable time delay (INST–500ms)	Adjustable trip delay allows quick protection and system coordination
Output contacts	2 Form C ground fault output contacts for operation of separate annunciation and trip circuits
Analog output (0–5V)	Allows for connecting an optional meter (PGA-0500) or control system
CT Loop monitoring	Alarms when CT is not connected
Contact operating mode	Fail safe operating mode for undervoltage applications, optional non fail safe mode available
Harmonic filtering	Eliminates nuisance tripping
Non volatile trip memory	Retains trip state while de energised to simplify troubleshooting
Microprocessor based	No calibration required, saves maintenance cost
Universal power supply	Allows operation in application where one side of PT is faulted, provides flexibility for numerous applications
Global certifications	Compliant with US, Canadian, European, and Australian standards for applications in almost any country

Accessories

EFCT Series Ground Fault Current Transformer
Required zero sequence current transformer specifically designed for low level detection.

PGA-0500 Analog % Current Meter
Optional panel mounted analog meter displays ground fault current as a percentage of the set point or 5A.

PMA-60 Series – Mounting Adapter
Required when panel mounting for AS/NZS 2081:2011 compliance

Specifications

IEEE Device Numbers	Ground fault (50G/N, 51G/N)
Input Voltage	See ordering information
Dimensions	**H** 75mm **W** 55mm **D** 115mm
Trip Level Settings	25–500mA
Trip Time Settings	INST–500ms
Contact Operating Mode	Fail safe (x=0 models) or selectable (x=2 models)
Harmonic Filtering	Standard feature
Test Button	Standard feature
Reset Button	Standard feature
CT Loop Monitoring	Standard feature
Output Contacts	Two isolated Form C contacts
Approvals	CSA certified, UL Listed (E340889), CE (European Union), RCM (Australian)
Compliance	AS/NZS 2081:2011 (x=0 models) or AS/NZS 2081: 2002 (x=2 models)
Analog Output	0–5V
Conformally coated	Yes
Warranty	5 years
Mounting	DIN, Surface (standard) Panel (with PMA-55 or PMA-60 adapter)

FUSECO

SE-704 Series

Earth Leakage Relay

Simplified Circuit Diagram

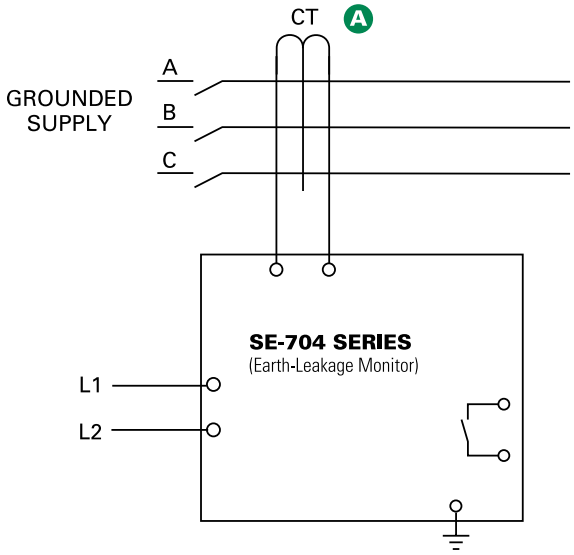

Ordering Information

ORDER NUMBER	POWER SUPPLY
SE-704-0U	120/240 VAC/VDC
SE-704-0D	12/24 VDC
SE-704-0T	48 VDC
SE-704-03	24 VAC

ACCESSORIES	REQUIREMENT
SE-CS30 Series	Required
PGA-0500	Optional
PMA-60	Optional

Description

The SE-704 is a microprocessor based earth leakage relay for resistance and solidly grounded systems. It offers very sensitive ground fault detection as low as 10 mA and can be used on systems with significant harmonic content. The SE-704 provides feeder level protection or individual load protection. The output contacts can be connected for use in protective tripping circuits or in alarm indication circuits. The analog output can be used with a PLC or a meter..

Features & Benefits

FEATURES	BENEFITS
Adjustable pickup (10mA–5A)	Adjustable trip setting provides a wide range of low level protection and system coordination
Adjustable time delay (30ms–2.0s)	Adjustable trip delay allows quick protection and system coordination
Output contacts	Form A and Form B ground fault output contacts for operation of separate annunciation and trip circuits
Analog output (0–5V & 0–1mA)	Allows for connecting an optional meter (PGA-0500) or control system
CT Loop monitoring	Alarms when CT is not connected
Selectable contact operating mode	Selectable fail safe or non fail safe operating modes allows connection to shunt or undervoltage breaker coil
Harmonic filtering	Eliminates nuisance tripping
Non volatile trip memory	Retains trip state when de energised to simplify troubleshooting
Microprocessor based	No calibration required saves maintenance cost
Universal power supply	Allows operation in application where one side of PT is faulted, provides flexibility for numerous applications

Accessories

SE-CS30 Series Ground Fault Transformer
Required zero sequence current transformer specifically designed for low level detection. Flux conditioner is included to prevent saturation.

PGA-0500 Analog % Current Meter
Optional panel mounted analog meter displays ground fault current as a percentage of the set point or 5 A.

Specifications

IEEE Device Numbers	Ground fault (50G/N, 51G/N)
Input Voltage	See ordering information
Dimensions	**H** 75mm **W** 55mm **D** 115mm
Trip Level Settings	10mA–5.0A
Trip Time Settings	30–2000ms
Contact Operating Mode	Selectable fail safe or non fail safe
Harmonic Filtering	Standard feature
Test Button	Standard feature
Reset Button	Standard feature
CT Loop Monitoring	Standard feature
Output Contacts	Isolated Form A and Form B
Approvals	UL Listed (E340889), CSA, CE (European Union) C Tick (Australian)
Analog Output	0–5V & 0–1mA
Conformally coated	Optional
Warranty	5 years
Mounting	DIN, Surface (standard) Panel (with PMA-55 or PMA-60 adapter)

SE-601 Series

DC Earth Fault Relay

Simplified Circuit Diagram

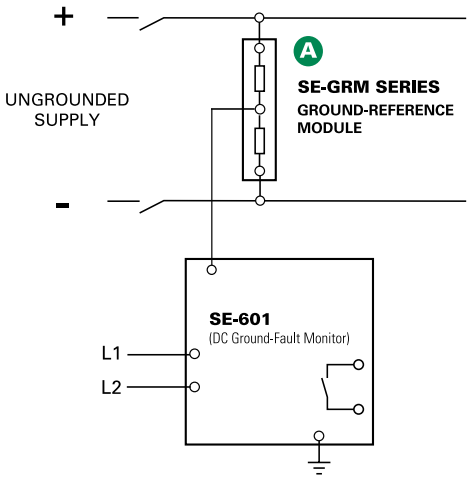

Ordering Information

ORDER NUMBER	POWER SUPPLY
SE-601-OU	120/240 VAC/VDC
SE-601-0D	12/24 VDC
SE-601-0T	48 VDC

ACCESSORIES	REQUIREMENT
SE-GRM Series	Required
PGA-0500	Optional
PMA-55	Optional
PGA-60	Optional

Description

The SE-601 is a microprocessor based earth fault relay for ungrounded dc systems. It provides sensitive earth fault protection without the problems associated with nuisance tripping. Earth fault current is sensed using an SE-GRM Series Ground Reference Module - a resistor network that limits ground fault current to 25mA. The SE-601 is used on ungrounded dc systems ranging from industrial 24 VDC control circuits to 1000 VDC solar and transportation systems.

Features & Benefits

FEATURES	BENEFITS
Adjustable pickup (1–20mA)	Ten settings provide a wide range of low level protection
Adjustable time delay (50ms–2.5s)	Adjustable trip delay allows quick protection or delayed response
Output contacts	Form A and Form B output contacts for operation of separate annunciation and trip circuits
Analog output (0–5 V & 0–1 mA)	Provides means for connecting to a meter (PGA-0500) or a control system
Non volatile trip Memory	Retains trip state when de energised to simplify troubleshooting
Selectable contact operating mode	Selectable fail safe or non fail safe operating modes allow connection to shunt or undervoltage breaker coil
Microprocessor based	No calibration required saves on maintenance cost

Accessories

A

SE-GRM Series Ground Reference Module
Required accessory, used to connect the SE-601 DC Ground Fault Monitor to the DC bus.

PGA-0500 Analog % Current Meter
Optional panel mounted analog meter displays ground fault current as a percentage of 22mA.

Specifications

IEEE Device Numbers	DC Overcurrent Relay (76G)
Input Voltage	See ordering information
Dimensions	**H** 75mm **W** 55mm **D** 115mm
Trip Level Settings	1–20mA
Trip Time Settings	0.05–2.5s
Output Contacts	Isolated Form A and Form B
Contact Operating Mode	Selectable fail safe or non fail safe
Test Button	Local
Reset Button	Local and remote
Analog Output	0–5V
Conformally Coated	Consult factory
Approvals	CSA certified, UL Listed (E340889), CE (European Union), C Tick (Australian)
Warranty	5 years
Mounting	DIN, Surface (standard) Panel (with PMA-55 or PMA-60 adapter)

FUSECO

SE-330AU Series

Neutral Earthing Resistor Monitor

Simplified Circuit Diagram

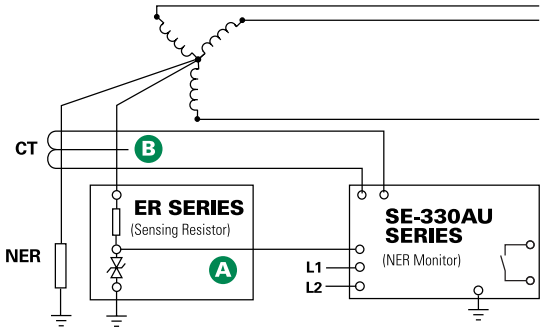

Ordering Information

ORDER NUMBER		POWER SUPPLY	COMM			K4 – UNIT HEALTHY
SE-330AU	–	X	X	–	0	X
SE-330AU for all apps. 35 kV or less		0=120/240 VAC/VDC 2=48 VDC	0=USB Only 1=DeviceNet 3=EtherNet (Dual RJ45) 4=EtherNet (SC Fibre & RJ45) 5=EtherNet (Dual SC Fibre) 6=IEC61850 (Dual RJ45) 7=IEC61850 (SC Fibre & RJ45) 8=IEC61850 (Dual SC Fibre)			0=Normally Open 1=Normally Closed

ACCESSORIES	REQUIREMENT
ER Series Sensing Resistor	Required
Current Transformer	Required
SE-IP65CVR-G	Optional
SE-MRE-600	Optional
RK-332	Optional

Description

The SE-330AU is an advanced earth fault and earthing resistor monitoring relay for low voltage and medium voltage transformers and generators. It monitors neutral current, neutral to earth voltage, and neutral to earth resistance. It provides continuous monitoring of the neutral to earth path to verify that the neutral earthing resistor (NER) is intact. This is of utmost importance, an open NER renders current sensing earth fault protection inoperative and could result in a false belief that the system is functioning properly. Outputs include four relay outputs, and an analog output. A mini USB port is included to view measured values, configure settings, and check event records. An on board micro SD card can be used for long term data logging. Network communications options are available. For non AS/NZS 2081 applications, see the SE-330 or SE-330HV.

Resistor Monitoring

The SE-330AU combines the measured values of resistance, current, and voltage to continuously determine that the NER is intact. It is able to detect a resistor failure with or without an earth fault present. Sensing resistors are matched to the system voltage and are used to monitor NERs on systems up to 35 kV. The SE-330AU resistor monitoring function is compliant with AS/NZS 2081.8:2011.

Earth Fault Monitoring

The SE-330AU uses a 5A or 30A primary current transformer to provide a pickup setting range of 0.125 to 5A or 0.75 to 30A to comply with AS/NZS 2081.6:2011. DFT filtering ensures that false trips due to harmonic noise from variable speed drives do not occur. Open CT detection is provided.

Accessories

A

ER Series Sensing Resistor
Required interface between the power system and the
SE-330AU. Eliminates hazardous voltage levels at the relay.

EFCT Series Earth Fault Current Transformer
Sensitive earth fault current detection (5 A primary).

SE-CS30 Series Earth Fault Current Transformer
Sensitive earth fault current detection (30 A primary).

SE-IP65CVR-G Hinged Transparent Cover
Watertight cover, tamper resistant, IP65 protection.

Features & Benefits

FEATURES	IEEE #	BENEFITS
Continuous open NER monitoring	3	Detect NER failure in accordance with ASNZS 2081.8:2011
Continuous shorted NER detection	3	Detect NER failure in accordance with ASNZS 2081.8:2011
AS/NZS 2081:2011 NER monitoring LED indication		LED indication to verify that sensitive open and short NER detection as required by AS/NZS 2081:2011 are configured and active
Earth fault detection	50G/N, 51G/N, 59N	Detect earth faults in accordance with ASNZS 2081.6:2011
Adjustable earth fault pickup		Pick up range 0.125 to 5A or 0.75 to 30A
Adjustable earth fault time delay		Trip time settings 0.10 to 0.50 seconds
Programmable output contacts		Two programmable Form C and One programmable Form A (can be set to combinations of Master Trip, NER Open Fault, NER Short Fault, Earth Fault, Unit Health)
Selectable contact operating mode		Selectable failsafe or non-failsafe operating modes allows connection to shunt or undervoltage breaker coil or alarm circuit (K2 and K3 output contacts)
Analog output (4 - 20 mA)		Connect an optional PGA-0520 meter or control system
Trip records		On-board 100-event (with date and time) recorder helps with system diagnostics
Harmonic filtering (DFT)		Eliminate false trips due to harmonic noise from ASDs
Local communications		Mini USB port to view measured values, configure settings, and check event records
Data logging		On-board microSD card (included) can be used for long-term data logging
Network communications		Remotely view measured values and event records, reset trips, and cause a remote trip. Available Protocol Options: **IEC 61850** - with dual RJ45, SC Fiber and RJ45, or Dual SC Fiber Interface **Modbus TCP and Ethernet/IP** - with dual RJ45, SC Fiber and RJ45, or Dual SC Fiber Interface **DeviceNet** - with CAN interface
Software		PC-interface software (SE-MON330) is available at Littelfuse.com/RelaySoftware
Geo-magnetic filter		Prevents changes in Earth's magnetic field from thunderstorms and other events from causing nuisance trip events
Unit healthy output		Verifies SE-330AU is operating correctly, available as Form A or Form B output contact
Conformal coating		Internal circuits are conformally coated to protect against corrosion and moisture

Specifications

IEEE Device Numbers	Ground Fault (50G/N, 51G/N, 59N) Checking Relay (3), Lockout Relay (86)
Input Voltage	See ordering information
Dimensions	**H** 213mm **W** 98mm **D** 132mm
EF Trip-Level Settings	125mA -5A (with EFCT series CT) 750mA -30A (with SE-CS30 series CT)
EF Trip-Time Settings	100-500ms
Vn Trip-Level Settings	20-2,000 VAC (<5 kV systems) 100-10,000 VAC (>5 kV systems)
Contact Operating Mode	K1 & K4 Fail-safe K2 & K3 Selectable fail-safe or non-fail-safe
Harmonic Filtering	Discrete-Fourier Transform (DFT) standard
Reset	Remote and front-panel button
Output Contacts	Two Form A and two Form C
Approvals	AS2081:2011 section 6 (EF) & 8 (NER) CSA certified, UL Listed (E340889), CE (European Union), RCM (Australia), FCC
Communications	mini USB (standard) DeviceNet, Ethernet, IEC 61850 (optional)
Analog Output	4-20mA, self or loop powered
Conformally Coated	Standard feature
Warranty	5 years
Mounting	Panel and Surface

Wiring Diagram

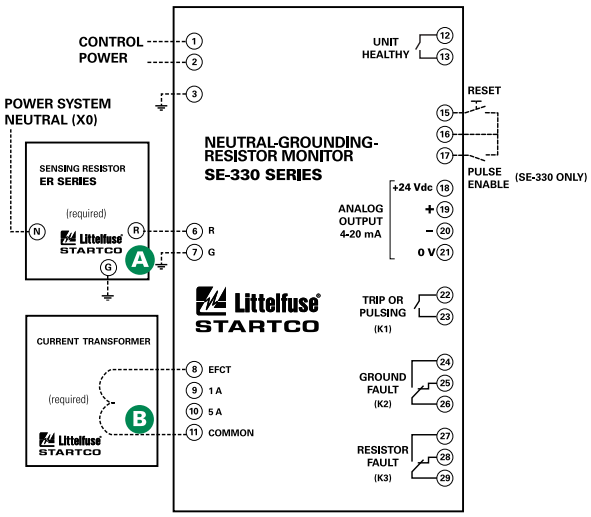

FUSECO

SE-330, SE-330HV Series

Neutral Earthing Resistor Monitor

Description

The SE-330 is an advanced earth fault and neutral earthing resistor monitoring relay. It measures neutral current, neutral to earth voltage, and neutral to earth resistance. It provides continuous monitoring of the neutral to earth path to verify that the neutral earthing resistor (NER) is intact. This is of utmost importance, an open NER renders current sensing earth fault protection inoperative and could result in a false belief that the system is functioning properly. The SE-330 can be used with low and medium voltage transformers and generators with low or high resistance earthing used in processing, manufacturing, chemical, pulp and paper, petroleum, and water treatment facilities. For high voltage applications, use the SE-330HV. For applications that require conformance to Australian standard AS/NZS 2081.8:2011, see the SE-330AU.

Simplified Circuit Diagram

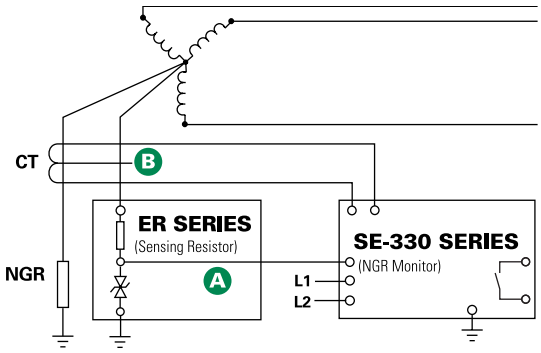

Resistor Monitoring

The SE-330 combines the measured values of resistance, current, and voltage to continuously determine that the NER is intact. It is able to detect a resistor failure with or with out an earth fault present. Sensing resistors are matched to the system voltage and are used to monitor NERs on systems up to 72kV.

Earth Fault Monitoring

The SE-330 uses an application appropriate current transformer to reliably detect earth fault currents as small as 100 mA. DFT filtering ensures that false trips due to harmonic noise from variable speed drives do not occur. Should the NER open and an earth fault subsequently occur, the SE-330 will detect the fault through voltage measurement, while other current only sensing relays would be ineffective.

Ordering Information

ORDER NUMBER		POWER SUPPLY	COMM			K4 – UNIT HEALTHY
SE-330	–	X	X	–	0	X
SE-330 for applications 35 kV or less **SE-330HV** for 72 kV applications		0=120/240 VAC/VDC 2=48 VDC	0=USB Only 1=DeviceNet 3=EtherNet (Dual RJ45) 4=EtherNet (SC Fibre & RJ45) 5=EtherNet (Dual SC Fibre) 6=IEC61850 (Dual RJ45) 7=IEC61850 (SC Fibre & RJ45) 8=IEC61850 (Dual SC Fibre)			0=Normally Open 1=Normally Closed

ACCESSORIES	REQUIREMENT
ER Series Sensing Resistor	Required
Current Transformer	Required
SE-IP65CVR-G	Optional
SE-MRE-600	Optional
RK-332	Optional

Accessories

A 

ER Series Sensing Resistor
Required interface between the power system and the /wwHV. Eliminates hazardous voltage levels at the relay.

B 

EFCT Series Earth Fault Current Transformer
Sensitive earth fault current detection (5A primary).

SE-CS30 Series Earth Fault Current Transformer
Sensitive earth fault current detection (30A primary).

Other Current Transformer
For low resistance NGRs choose a CT primary approximately equal to the NGR rating.

SE-IP65CVR-G Hinged Transparent Cover
Watertight cover, tamper resistant, IP65 protection.

Features & Benefits

FEATURES	IEEE #	BENEFITS
Continuous NER monitoring	3	Detects open NER failure within 10 seconds, reduces transient over voltage risk, removes risk of ground fault detection failure
Shorted NER detection	3	Detects a ground fault on the neutral that could bypass the resistor, ensures fault current is not higher than expected
Earth Fault detection	50G/N, 51G/N, 59N	Main or backup protection to detect an earth fault anywhere in the system
Adjustable pickup (2–100%)		Pick up range 2-100% of CT primary
Adjustable time delay (0.1–10s)		Trip Time settings 0.10 to 10 seconds
Universal CT compatibility		Allows the use of a CT that gives required ground fault settings
Programmable output contacts		Two programmable Form C and One programmable Form A (can be set to combinations of Master Trip, NER Open Fault, NER Short Fault, Earth Fault, Unit Health)
Analog output (4–20mA)		Connect an optional PGA-0520 meter or control system
Trip records		On board 100 event (with date and time) recorder helps with system diagnostics
Harmonic filtering (DFT)		Eliminate false trips due to harmonic noise from ASDs
Local communications		Mini USB port to view measured values, configure settings, and check event records
Data logging		On board microSD card (included) can be used for long term data logging
Network communications		Remotely view measured values and event records, reset trips, and cause a remote trip Available Protocol Options: **IEC 61850** – with dual RJ45, SC Fibre and RJ45, or Dual SC Fibre Interface **Modbus TCP and Ethernet/IP** – with dual RJ45, SC Fibre and RJ45, or Dual SC Fibre **Interface DeviceNet** – with CAN interface
Software		PC interface software (SE-MON330) is available at Littelfuse.com/RelaySoftware
Selectable reset mode		Selectable latching or auto reset operation
Unit healthy output		Verifies SE-330 is operating correctly, available as Form A or Form B output contact
Conformal coating		Internal circuits are conformally coated to protect against corrosion and moisture

Specifications

IEEE Device Numbers	Ground Fault (50G/N, 51G/N, 59N), Checking Relay (3), Lockout Relay (86)
Input Voltage	See ordering information
Dimensions	**H** 213mm **W** 98mm **D** 132mm
GF Trip Level Settings	2–100% of CT Primary Rating in 1% increments
GF Trip Time Settings	0.1–10s
Vn Trip Level Settings	20–2,000 VAC (≤5 kV systems) 100–10,000 VAC (>5 kV systems)
Contact Operating Mode	Selectable fail safe or non fail safe (K1, K2, K3)
Harmonic Filtering	Standard feature
Reset Button	Standard feature
Output Contacts	Two Form A and two Form C
Pulsing Circuit	1.0–3.0s in 0.2s increments (SE-330 only)
Approvals	CSA certified, UL Listed (E340889), CE (European Union), RCM (Australian)
Communications	Mini USB (standard); DeviceNet (optional), IEC 61850 (optional), Modbus TCP and EtherNet/IP (optional)
Analog Output	4–20mA, self or loop powered
Conformally Coated	Standard feature
Warranty	5 years
Mounting	Panel, Surface (optional)

Wiring Diagram

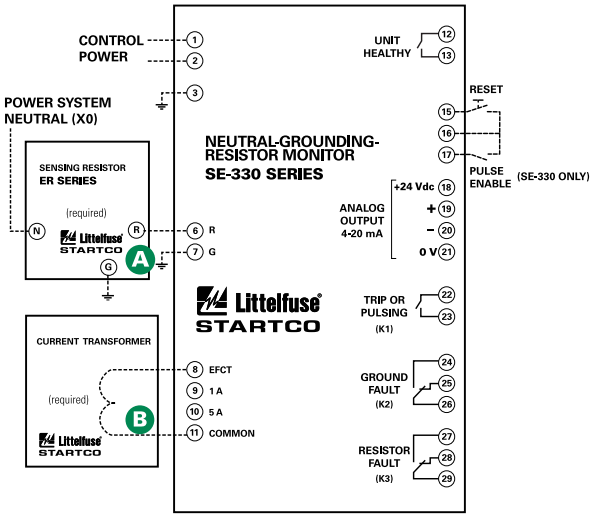

FUSECO

MP8000

Motor Protection Relay

Description

The MP8000 is an advanced motor protection electronic overload relay that is fully programmable via Bluetooth using the Littelfuse app on an Android or iPhone mobile device. It is easy to use and arc flash safety is increased because the app allows settings to be modified and real time operational information viewed. Viewing operational information and faults on the app does not require the user to open the control panel. The MP8000 protects any motor drawing 0.5–1,000 full load Amps (external CT's are required above 100 amperes). It is designed for single or 3 phase systems with operating voltages of 90–690 VAC (use of external potential transformers can extend upper voltage range above 690 VAC). Common applications include conveyor systems, HVAC equipment, saws and grinders, fan motors, and almost any pumping application. Protection is unsurpassed by combining overload, voltage, phase loss and reversal, voltage and current unbalance, power monitoring, and underload in one package. For standalone applications, the Bluetooth interface can be used when paired with a smartphone or tablet. The units also feature an Ethernet communications port that can be used to form an Ethernet Modbus TCP/IP network or Ethernet/IP. Units can be remotely monitored and controlled from a PC, or SCADA system, and data logging through a PC with the optional Solutions software or other software program using the MP8000 memory map. This capability allows for a simple cost effective way to further enhance arc flash safety.

Wiring Diagram

TYPICAL WIRING DIAGRAM FOR 3-PHASE

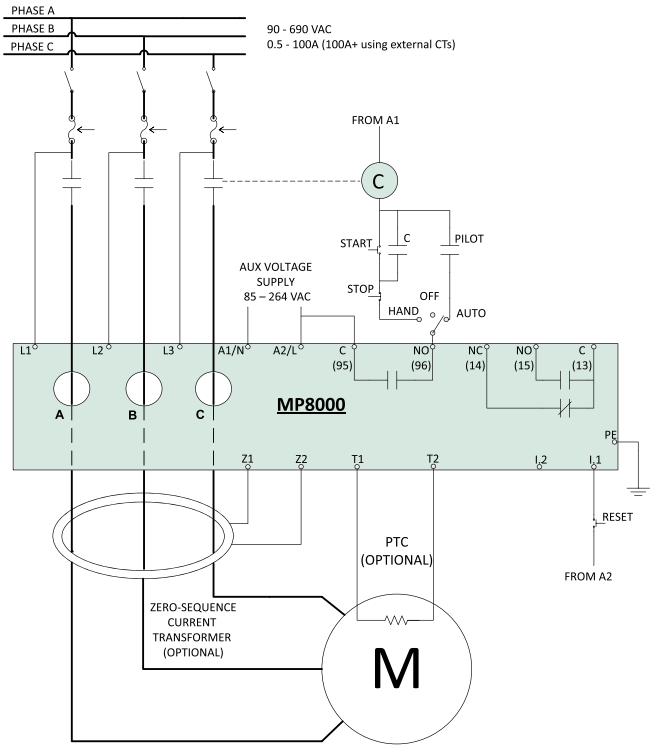

Features & Benefits

FEATURES	BENEFITS
Bluetooth interface	Visual indication for programming, viewing real time voltage or current, and last fault information (date and time stamped)
Programmable voltage and current settings	Allows usage on wide range of systems
3 selectable restart options	Choose from automatic, semi automatic, or manual to best meet individual application needs
4 programmable delay timers	Program separate delay times for power up, rapid cycle protection, motor cool down, and underload restarting
Flexible reset	Reset can be done through pushbutton on panel, remotely via the network
Network communications capability	Compatible with Ethernet Modbus TCP/IP and Ethernet/IP

Accessories

ZSCT Series Current Transformer
Used with Littelfuse relays to detect low levels of earth leakage current.

Ordering Information

MODEL	LINE VOLTAGE	MOTOR FULL AMP RANGE	DESCRIPTION
MP8000	90–690VAC (use of external potential transformers can extend upper voltage range above 690VAC)	0.5–1,000A+ (external CT's required above 100A)	Provides remote wired communication via Ethernet Modbus TCP/IP or Ethernet/IP

Advanced Features

- Overload/Overpower (49)
- Underload/Underpower (37P)
- Overcurrent (51)/Jam
- Undercurrent (37)
- Current Unbalance/Phase Loss (46)
- Phase Reversal (47)
- Overvoltage (59)
- Undervoltage (27)
- Voltage Unbalance (47)
- Rapid Cycling/Jog
- Contactor Failure
- Zero Sequence Ground Fault (50Ns)
- PTC Motor Overtemperature (49)

MP8000
Littelfuse App icon

Available on the App Store

GET IT ON Google Play

Specifications

Functional Characteristics	
Frequency	50/60Hz
TC Overcurrent Trip Class	Trip class 02–60 or linear
Output Characteristics	
Output Contact Rating Control relay	SPST – Form A
Auxiliary relay	SPDT – Form C
Pilot Duty Rating	B300
General Purpose	5A @ 240 VAC
General Characteristics	
Ambient Temperature Range	
Operating	–40° to 70°C
Storage	–40° to 85°C
Accuracy	
Voltage	±1% of reading ±0.5 V
Current	±2% (2 to 100 amperes direct)
Timing	+/–0.5% of setting +/– 1second
GF Current	±5%
Repeatability	
Voltage	±0.5%
Current	±1% (2 to 100 A direct)
Power Consumption	<5 W
Pollution Degree	3 (conformal coating standard)
Class of Protection	IP20
Relative Humidity	10–95%, non condensing per IEC 68-2-3
Terminal Torque (deplug-gable terminal blocks)	5.5 in.–lbs.
Terminal Torque (Earth Ground)	7.9 in.–lbs.
Standards Passed	
Electrostatic Discharge (ESD)	IEC 61000-4-2, Level 3, 6kV contact, 8kV air
Radio Frequency Immunity (RFI), Conducted	IEC 61000-4-6, Level 3 10V/m
Radio Frequency Immunity (RFI), Radiated	IEC 61000-4-3, Level 3 10V/m
Fast Transient Burst	IEC 61000-4-4, Level 3, 3.5kV input power Surge IEC 61000-4-5, Level 3, 2kV line to line; Level 4, 4kV line to ground
FCC Rating	Part 15.107 for emissions, Part 15.247 for intentional radiators
Short Circuit Withstand Rating	100kA symmetrical at 690VAC
Hi Potential Test	Meets UL508 (2 x rated V +1000V for 1 minute)
Safety Marks	
cULus	UL60947, UL1053, C22.2 (File #E68520)
CE	IEC 60947 Edition 5.2, IEC 60947-8
Maximum Conductor Size (with insulation)	0.63"
Dimensions	**H** 74.42mm **W** 103.63mm **D** 121.67mm
Weight	385.6g
Mounting Method	Surface mount (4 – #8 screws) or DIN rail mount

FUSECO

MPU-32 Series

Motor Protection Unit

1

2

Simplified Circuit Diagram

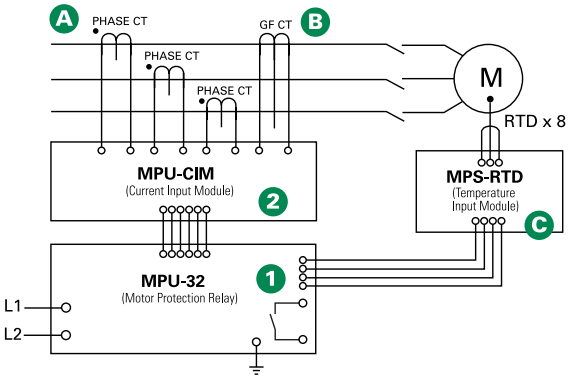

Ordering Information

ORDER NUMBER	POWER SUPPLY
MPU-32-00-00	TIA-232
MPU-32-01-00	TIA-232 & TIA-485
MPU-32-02-00	TIA-232 & DeviceNet™
MPU-32-04-00	TIA-232 & EtherNet/IP™ & Modbus® TCP

NOTE: One of the following is required: MPU-CIM-00-00 Current Input Module, or MPU-CTI-RT-00 Current Input Module with ring tonque terminals

ACCESSORIES	REQUIREMENT
Phase CT's	Required
MPS-RTD-01-00	Optional
MPS-DIF-01-00	Optional
MPU-32-SMK	Optional
CA-945	Optional
MPU-16A-Y92A-96N	Optional

Description

The MPU-32 Motor Protection Unit is used to provide currentand temperature based protection, metering, and data logging for three phase low voltage medium horsepower induction motors. This relay is ideal for retrofitting and upgrading obsolete or aging motor protection using existing CT's. See the PMA Family of Panel Mount Adapter Kits to replace common obsolete relays.

1 Motor Protection Unit

- Three ac current inputs
- Earth leakage CT input
- Programmable digital input
- 24 VDC source for digital input
- Programmable 4–20-mA analog output
- On board temperature sensor input,
- 100-Ω-Platinum RTD or PTC
- Three programmable output relays
- Local RS-232 communications, optional Network Communications
- PC interface software (SE-Comm-RIS)
- 4 line x 20 character backlit LCD display
- Keypad for programming and display selection
- 4 LEDs; 1 user programmable

2 Current Input Module (MPU-CIM)

The MPU-CIM Current Input Module is the interface between the MPU-32 relay and the 5A secondary, 1A secondary, and sensitive current transformers. The MPU-CIM is ordered separately from the MPU-32 and can be surface or DIN rail mounted. Wire clamping terminals are standard but the MPUCTI is available for those who require ring tongue terminals.

Accessories

A

Phase Current Transformers
Phase CT's are required to detect phase currents. For upgrade applications, existing CT's can be used.

B

Ground Fault Current Transformer
Optional zero sequence current transformer detects ground-fault current. Available with 5A and 30A primary ratings for low-level pickup.

C

MPS-RTD Temperature Input Module
Optional module provides 8 inputs to connect Pt100, Ni100, Ni120, and Cu10 RTDs.

D

MPS-DIF Differential Current Module
Optional motor differential protection, compatible with core balance and summation current transformer connections.

Features & Benefits

FEATURES	IEEE #	BENEFITS
Overload	49, 51	Extends motor life and prevents insulation failures and fires
Dynamic thermal model		Provides protection through starting, running, and cooling cycles
Communications		Remotely view measured values and event records, reset trips, and access setpoints
Ground fault	50G/N, 51G/N	Prevents catastrophic failures and fires
Current unbalance/ Phase loss/Phase reverse	46	Prevents overheating due to unbalanced phases
RTD temperature	38, 49	RTD temperature protection (MPS-RTD module) for high ambient or loss of ventilation protection
Phase loss/Phase reverse (current)	46	Detects unhealthy supply conditions
Overcurrent	50, 51	Prevents catastrophic failures and fires; extends motor life
Jam		Prevents motor damage by detecting mechanical jams or excessive loading
Undercurrent	37	Detects low level or no load conditions
PTC overtemperature	49	Overtemperature (PTC) protection for high ambient or loss of ventilation detection
Starts per hour	66	Limits the motor starts per hour to prevent overheating
Differential	87	Optional MPS-DIF module for sensitive winding fault protection
Reduced overcurrent mode		Minimizes arc flash hazards during maintenance
Metering		View measured and calculated parameters with on board display
MPU-CIM		Separate current input module to reduce risk of open CT hazard and for convenient installation
Analog output		Provides means for metering selectable parameters
Data logging		On board 100 event recorder for data logging
Conformal coating		Internal circuits are conformally coated to protect against corrosion and moisture

Wiring Diagram

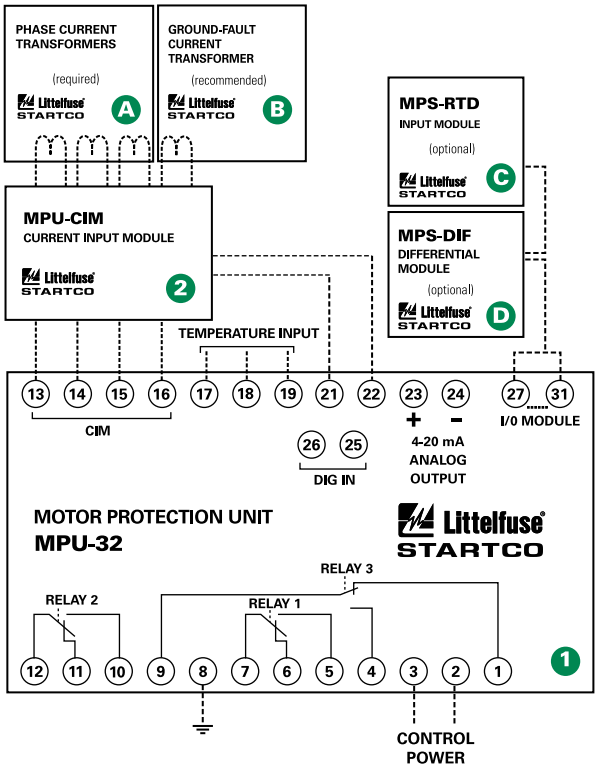

Specifications

Protective Functions (IEEE Device Numbers)	Overload (49, 51) Phase reverse (current) (46) Overcurrent (50, 51) Jam Ground fault (50G/N, 51G/N) PTC overtemperature (49	RTD temperature (38, 49) Unbalance (current) (46) Starts per hour (66) Differential (87) Phase loss (current) (46) Undercurrent (37)
Input Voltage	65-265 VAC, 25 VA; 80-275 VDC, 25 W	
Power-Up Time	800ms at 120 VAC	
Ride-Through Time	100ms minimum	
24 VDC Source	100mA maximum	
AC Measurements	True RMS and DFT, Peak, 16 samples/cycle, and positive and negative sequence of fundamental	
Frequency	50, 60 Hz or ASD	
Output Contacts	Three Form C programmables	
Communications	TIA-232 (standard); TIA-485, DeviceNet™, Ethernet (optional)	
Analog Output	4–20mA, programmable	
Conformally Coated	Standard feature	
Warranty	10 years	
Mounting		
(Control Unit)	Panel (standard) Surface (with MPU-32-SMK converter kit)	
(Current Input Module)	DIN, Surface	
Approvals	CSA certified, CE (European Union), UL Recognized, C Tick (Australian)	

FUSECO

MPS Series

Motor Protection System

Simplified Circuit Diagram

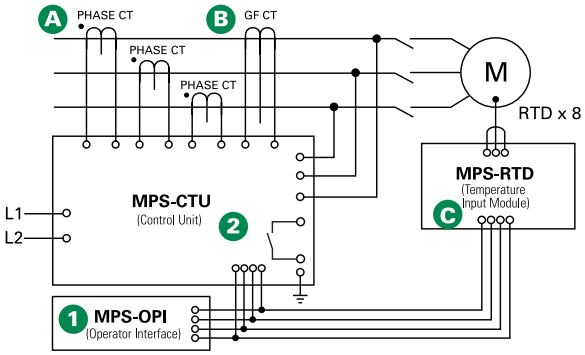

Ordering Information

ORDER NUMBER	COMMUNICATIONS
MPS-CTU-01-00	RS-485
MPS-CTU-02-00	RS-485 & DeviceNet™
MPS-CTU-03-00	RS-485 & Profibus®
MPS-CTU-04-00	RS-485 & EtherNet/IP™ & Modbus® TCP

ACCESSORIES	REQUIREMENT
MPS-OPI-01-00	Recommended
Phase CT's	Required
Ground Fault CT	Recommended
MPS-RTD-01-00	Optional
MPS-DIF-01-00	Optional
SE-IP65CVR-M	Optional

Description

The MPU-32 Motor Protection Unit is used to provide currentand temperature based protection, metering, and data logging for three phase low voltage medium horsepower induction motors. This relay is ideal for retrofitting and upgrading obsolete or aging motor protection using existing CT's. See the PMA Family of Panel Mount Adapter Kits to replace common obsolete relays.

1 Motor Protection Unit

- Three ac current inputs
- Earth leakage CT input
- Programmable digital input
- 24 VDC source for digital input
- Programmable 4–20-mA analog output
- On board temperature sensor input,
- 100-Ω-Platinum RTD or PTC
- Three programmable output relays
- Local RS-232 communications, optional Network Communications
- PC interface software (SE-Comm-RIS)
- 4 line x 20 character backlit LCD display
- Keypad for programming and display selection
- 4 LEDs; 1 user programmable

2 Current Input Module (MPU-CIM)

The MPU-CIM Current Input Module is the interface between the MPU-32 relay and the 5A secondary, 1A secondary, and sensitive current transformers. The MPU-CIM is ordered separately from the MPU-32 and can be surface or DIN rail mounted. Wire clamping terminals are standard but the MPUCTI is available for those who require ring tongue terminals.

Accessories

A 

Phase Current Transformers
Phase CT's are required to detect phase currents.

B 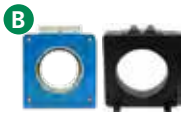

Ground Fault Current Transformer
Optional zero sequence current transformer detects ground fault current. Available with 5A and 30A primary ratings for low level pickup.

C 

MPS-RTD Temperature Input Module
Optional module provides 8 inputs to connect Pt100, Ni100, Ni120, and Cu10 RTDs.

D 

MPS-DIF Differential Current Module
Optional motor differential protection, compatible with core balance and summation current transformer connections.

Features & Benefits

FEATURES	IEEE #	BENEFITS
Overload	49, 51	Extends motor life and prevents insulation failures and fires
Current unbalance/ Phase loss/Phase reverse	46	Prevents overheating and extends motor life
Overcurrent/Jam	50, 51	Prevents catastrophic failures and fires and extends motor life
Undercurrent	37	Detects low level or no load conditions
Ground fault	50G/N, 51G/N	Prevents catastrophic failures and fires
RTD temperature	38, 49	Optional RTD temperature protection (MPS-RTD module) for high ambient or loss of ventilation protection
Overvoltage	59	Prevents stress to insulation
Undervoltage	27	Prevents a start attempt when it will damage the motor
Voltage unbalance	47	Detects unhealthy supply voltage
Phase differential	87	Provides sensitive protection for high resistance winding faults
Dynamic thermal mode		Provides protection through starting, running, overload, and cooling cycles
Reduced overcurrent mode		Minimizes Arc Flash hazards during maintenance
Starter control		Simplifies the installation by reducing component count
Metering		Displays the measured and calculated motor parameters
Data logging		On board 64-event recorder helps with system diagnosis
Communications		Remotely view measured values, event records & reset trips
Conformal coating		Internal circuits are conformally coated to protect against corrosion and moisture

Wiring Diagram

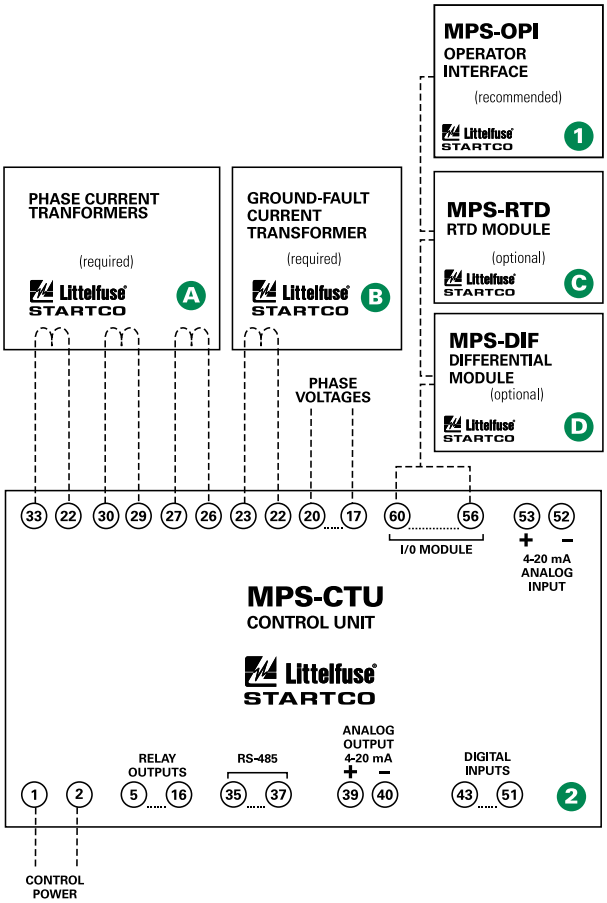

Specifications

Protective Functions (IEEE Device Numbers)	Overload (49, 51) Phase reverse (current) (46) Overfrequency (81) Overcurrent (50, 51) Jam Underfrequency (81) Ground fault (50G/N, 51G/N) Undercurrent (37) Unbalance (voltage) (47) Failure to accelerate (47) Power factor (55) RTD temperature (38, 49) Unbalance (current) (46) Underspeed (14) Starts per hour (66) Phase loss (voltage) (47) Overvoltage (59) Differential (87) Phase loss (current) (46) Undervoltage (27) Phase reverse (voltage)
Input Voltage	65–265 VAC, 25 VA; 80—275 VDC, 25 W
Power Up Time	800ms at 120 VAC
Ride Through Time	100ms minimum
24 VDC Source	100mA maximum
AC Measurements	True RMS and DFT, Peak, 16 samples/cycle, and positive and negative sequence of fundamental
Frequency	50, 60 Hz or ASD
Inputs	Phase current, Earth leakage current, Phase voltage, 7 digital, tachometer, 1 analog
Output Contacts	5 contacts — See Product Manual
Approvals	CSA Certified, RCM (Australian), UL Recognized
Communications	Allen-Bradley® DFI and Modbus® RTU (Standard); DeviceNet™, Profibus®, Ethernet (Optional)
Conformally Coated	Standard feature
Warranty	10 years
Mounting	
(Control Unit)	Surface
(Operator Interface)	Panel, Control Unit mounted

FUSECO

FPS Series

Feeder Protection System

Simplified Circuit Diagram

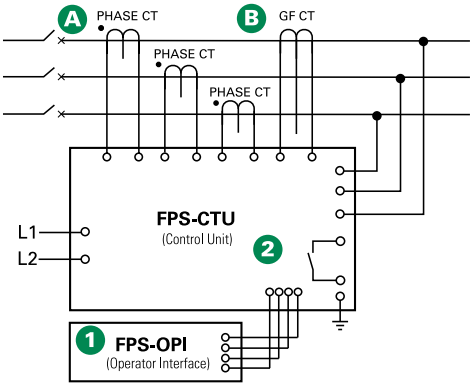

Ordering Information

ORDER NUMBER	OPTION
FPS-CTU-01-00	RS-485
FPS-CTU-02-00	RS-485 & DeviceNet™
FPS-CTU-03-00	RS-485 & Profibus®
FPS-CTU-04-00	RS-485 & Ethernet

ACCESSORIES	REQUIREMENT
FPS-OPI-01-00	Recommended
SE-IP65CVR-M	Optional
Phase CT's	Required
Ground-Fault CT	Recommended
MPS-RTD-01-00	Optional

Description

The FPS Feeder Protection System monitors voltage and current to provide a comprehensive package of 17 protective functions. The FPS is a modular system with integrated protection, breaker control, metering, and data logging functions.

1 Operator Interface (FPS-OPI)

- Large, bright, 4 x 20 vacuum fluorescent display
- Display metered values
- Access set points
- Powered by Control Unit
- Panel mount or attach directly to Control Unit
- Remote mounting (1.2km or 4000ft maximum loop length)
- 1/2 DIN size
- Hazardous-location certified

2 Control Unit (FPS-CTU)

- Current inputs – 5A or 1A secondary phase current transformers
- Voltage inputs – up to 600 V without PTs
- Earth-leakage input – 5A or 1A secondary or sensitive transformer
- 8 digital inputs, 5 relay outputs, 1 analog input and output
- 24 VDC supply for OPI and RTD modules, and for digital inputs
- IRIG-B time-code input
- 1/2 DIN size, surface mount
- RS-485 network communications (Standard)
- DeviceNet™, Profibus®, or Ethernet communications available

Accessories

A 

Phase Current Transformers
Phase CT's are required to detect phase currents.

B 

Ground-Fault Current Transformer
Zero-sequence current transformer detects ground-fault current. Available with 5A and 30A primary ratings for low-level pickup.

C 

MPS-RTD Temperature Input Module
Optional module provides 8 inputs to connect Pt100, Ni100, Ni120, and Cu10 RTDs.

D 

SE-IP65CVR-M Cover
Optional gasketed, transparent cover for limited access and IP65 protection for an Operator Interface Module.

Features & Benefits

FEATURES	IEEE #	BENEFITS
Overload	49, 51	Long time overcurrent provides thermal protection for feeder or load
Inverse-time overcurrent	50, 51	Coordination using IEEE and IEC Curves
Definite-time overcurrent	50, 51	Instantaneous overcurrent to detect catastrophic failure
Current unbalance/Phase loss/Phase reverse	46	Detects an open or high impedance phase
Ground fault	50G/N, 51G/N	Inverse and definite time. Early insulation failure detection.
RTD temperature	38, 49	Optional protection (MPS-RTD module) for load temperature monitoring
Overvoltage	59	Limits stress to insulation
Undervoltage	27	Detects a damaging brown out condition
Voltage unbalance	47	Detects unhealthy supply voltage
Two setting groups		Minimizes Arc-Flash hazards during maintenance
Breaker control		Allows local and remote operation; reduces component count
Metering		Displays the measured and calculated parameters
Data logging		On-board 64-event recorder helps with system diagnosis
Communications		Remotely view measured values, event records, & reset trips
Conformal coating		Internal circuits are conformally coated to protect against corrosion and moisture
Communications		Remotely view measured values, event records & reset trips
Conformal coating		Internal circuits are conformally coated to protect against corrosion and moisture

Wiring Diagram

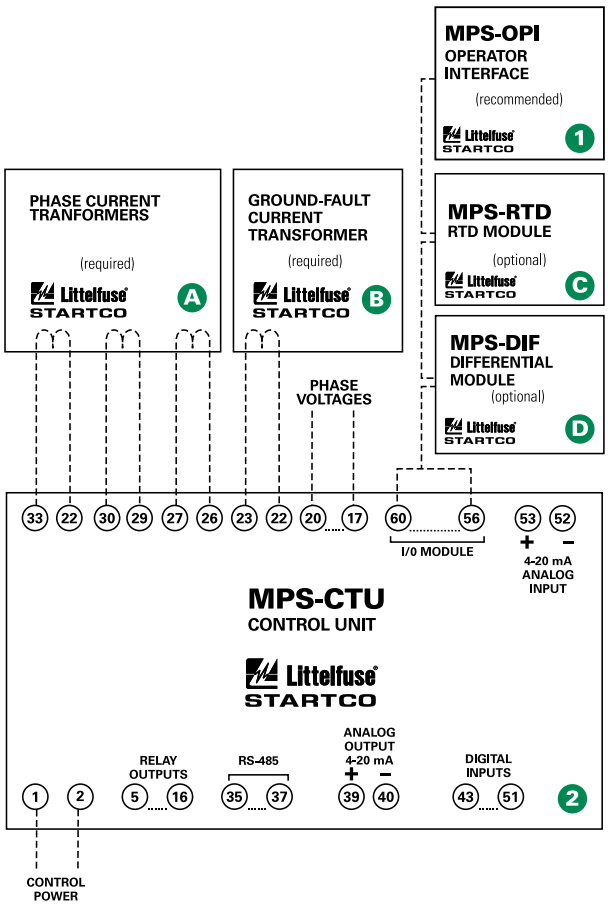

Specifications

Protective Functions (IEEE Device Numbers)	Overload (49, 51) Phase reverse (current) (46) Overfrequency (81) Overcurrent (50, 51) Underfrequency (81) Ground fault (50G/N, 51G/N) Unbalance (voltage) (47) RTD temperature (38, 49)	Unbalance (current) (46) Phase loss (voltage) (47) Overvoltage (59) Phase loss (current) (46) Undervoltage (27) Phase reverse (voltage) (47) Power factor (55)
Input Voltage	665-265 VAC, 25 VA; 80-275 VDC, 25 W	
Power Up Time	800ms at 120 VAC	
Ride Through Time	100ms minimum	
24 VDC Source	100mA maximum	
AC Measurements	True RMS and DFT, Peak, 16 samples/cycle, and positive and negative sequence of fundamental	
Frequency	50, 60 Hz	
Inputs	Phase current, Earth leakage current, Phase voltage, 7 digital, 1 analog	
Output Contacts	5 contacts — See Product Manual	
Approvals	CSA certified, C-Tick (Australian)	
Communications	Allen-Bradley® DFI and Modbus® RTU (Standard); DeviceNet™, Profibus®, Ethernet (Optional)	
Conformally Coated	Standard feature	
Warranty	10 years	
Mounting		
(Control Unit)	Surface	
(Operator Interface)	Panel, Control Unit mounted	

FUSECO

FPU-32 Series

Feeder Protection Unit

NOTE: The FPU-32 consists of the Feeder Protection Unit (pictured above) and the MPU-CIM Current Input Module (not pictured).

Simplified Circuit Diagram

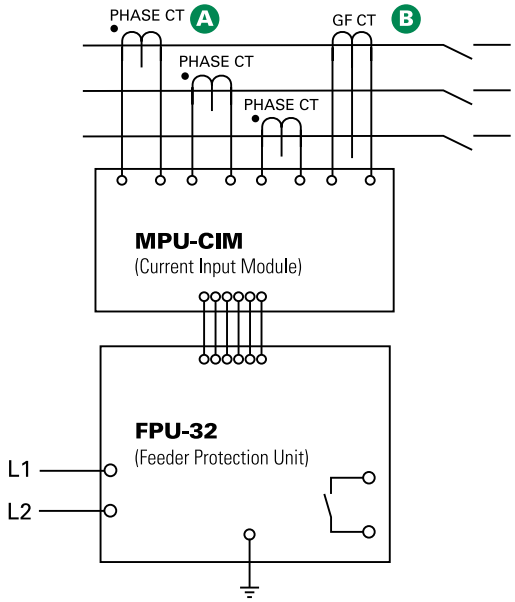

Ordering Information

ORDER NUMBER	POWER SUPPLY
FPU-32-00-00	TIA-232
FPU-32-01-00	TIA-232 & RS-485
FPU-32-02-00	TIA-232 & DeviceNet™
FPU-32-04-00	TIA-232 & Ethernet

NOTE: One of the following is required: MPU-CIM-00-00 Current Input Module, or MPU-CTI-RT-00 Current Input Module with ring-tonque terminals.

ACCESSORIES	REQUIREMENT
Phase CT's	Recommended
Ground-Fault CT	Optional
MPU-16A-Y92A-96N	Optional

Description

The FPU-32 Feeder Protection Unit provides integrated protection, metering, and data logging functions. It is an excellent choice for retrofitting and upgrading older relays because of its compact size and ability to use existing CT's. The FPU-32 is used to protect distribution feeders in processing, manufacturing, petroleum, chemical, and wastewater treatment facilities.

Features & Benefits

FEATURES	BENEFITS
IEC & IEEE overcurrent protection curves	Definite and inverse time settings for system coordination; prevents catastrophic failures
Two setpoint groups	Create distinctive settings for maintenance or for two different loads
Reduced overcurrent mode	Maintenance mode setting to reduce the risk of arc flash hazards
Data logging	On board 100 event recorder and remote data logging helps with system diagnostics
Overload	Thermal protection for connected load
Phase loss/Phase reverse (current)	Detects unhealthy supply conditions
Unbalance (current)	Prevents overheating due to unbalanced phases
Communications	Remotely view measured values, event records & reset trips

Accessories

Phase Current Transformers
Phase CT's are required to detect phase currents.

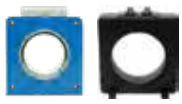

Ground-Fault Transformer
Zero-sequence current transformer detects ground fault current. Available with 5A and 30A primary ratings for low-level pickup.

Specifications

Protective Functions (IEEE Device Numbers)	Overload (49, 51) Phase sequence (46) Unbalance (46) Phase loss (46)	Definite-time overcurrent (50, 51) Inverse-time overcurrent (50, 51) Ground fault (50G/N, 51G/N) RTD/PTC temperature (49)
Input Voltage	65–265 VAC, 30 VA; 80–275 VDC, 25 W	
Power-Up Time	800ms at 120 VAC	
Ride-Through Time	100ms minimum	
24 VDC Source	400mA maximum	
AC Measurements	True RMS and DFT, Peak 32 samples/cycle and positive and negative sequence of fundamental	
Frequency	50, 60Hz	
Output Contacts	Three Form C	
Approvals	CSA certified, CE, C Tick (Australian), UL Recognised	
Communications	TIA-232 (standard); TIA-485, DeviceNet™, Ethernet (optional)	
Analog Output	4–20mA, programmable	
Conformally Coated	Standard feature	
Warranty	10 years	
Mounting		
(Control Unit)	Panel (standard) Surface (with MPU-32-SMK converter kit)	
(Current Input Module)	DIN, Surface	

EL3100 Series

Ground Fault & Insulation Monitor

Description

The EL3100 is a self-powered ground fault and phase voltage indication system for 3 phase systems. The EL3100 meets the National Electrical Code (NEC) and the Canadian Electrical Code (CEC) requirements for ground detectors for ungrounded alternating current systems. Voltage connections are provided on the EL3100 for 208, 240, 480, and 600V systems. Three green LED's on the EL3100 indicate the presence of phase to ground voltage and one red LED indicates a ground fault. The EL3100 can operate stand alone or with up to five remote LED indicators. A solid state relay output provides indication of a ground fault. The output relay is closed when the 3 phase neutral voltage shifts as the result of ground leakage.

Simplified Circuit Diagram

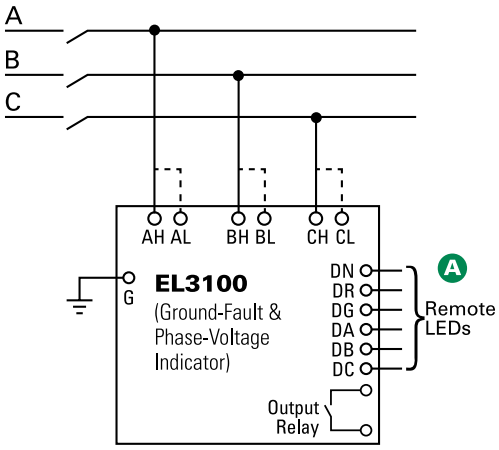

Features & Benefits

FEATURES	BENEFITS
NEC® and CEC Code compliant	Meets National Electrical Code (NEC®) Article 250.21 and Canadian Electrical Code Part 1, Section 10-106 (2) requirements for ungrounded systems
Low voltage remote LEDs	System voltage is not present at the remote LED location
Phase voltage indication	Indicates the presence of voltage on both grounded and ungrounded systems
Output relay	Allows for remote ground-fault indication

Accessories

Remote LEDs
High-intensity 16-mm IP67 LED lamps available in red and green colors.

Ordering Information

ORDER NUMBER	MOUNTING
EL3100-00	DIN, Surface

ACCESSORIES	REQUIREMENT
RK-310x-0y	Optional

Note: X=R for red LED and G for green LED
Y=0 for no label and 1 for a ground-fault label

Specifications

Input Voltage	Input L: 208/240 VAC Input H: 480/600 VAC
Dimensions	**H** 87.0mm **W** 112.5mm **D** 56.0mm
Approvals	CSA certified, UL Listed (E340889)
Conformally Coated	Standard feature
Warranty	5 years
Mounting	DIN, Surface

FUSECO

SE-134C, SE-135 Series

Trailing Cable Relay

Simplified Circuit Diagram

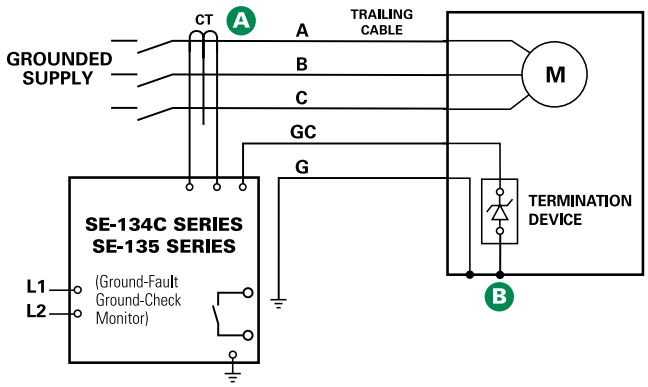

Ordering Information

ORDER NUMBER	OPTION	POWER SUPPLY	COMM
SE-134C	Blank or XGC	0=120/240 VAC/VDC 1=24/48 VDC(1)	0=None
SE-135	Blank or XGC	0=120/240 VAC/VDC 1=24/48 VDC(1) (2)	0=None

ACCESSORIES	REQUIREMENT
SE-CS10 Series	Required
SE-CS40 Series (for SE-135)	Optional
SE-TA6A Series (for SE-134C)	Required
SE-TA12A/SE-TA12B Combination (for SE-134C)	Optional
SE-TA12A Series (for SE-135)	Required
SE-IP65CVR-G	Optional
RK-132	Optional
PPI-600V	Optional

(1) CE/C-Tick not available.
(2) Not available with Ethernet option 3.
(3) See ordering information.

Description

The SE-134C/SE-135 is a microprocessor based, combination pilot wire monitor and earth fault relay for resistance grounded or solidly earthed systems. It continuously monitors the integrity of the earth conductor to protect portable equipment from hazardous voltages caused by earth faults. The SE-134C/SE-135 is field proven in monitoring trailing cables on large mobile equipment such as drag lines, mining shovels, shore to ship power cables, dock-side cranes, stacker reclaimers, submersible pumps, and portable conveyors.

Features & Benefits

FEATURES	BENEFITS
Adjustable pickup (0.5–12.5A for SE-CS10) (2–50A for SE-CS40)	Unit can be used on a wide variety of trailing cable applications
Adjustable time delay (0.1–2.5s)	Adjustable trip delay for quick protection and system coordination
Output contacts	Separate annunciation of ground fault and ground check faults
Ground-check LED indication	Indication of open or short ground-check wire makes it easier to find faults
CT loop monitoring	Alarms when CT is not connected
High induced ac rejection	Makes unit suitable for applications with high voltages and long cables
DFT (Harmonic) filter	Prevents false operation
Zener-characteristic termination assembly	Provides reliable ground-check loop verification
Fail-safe circuits	Ensures ground-check and ground-fault circuits remain safe even in the event of equipment failure
Conformal coating	Additional coating protects circuit boards against harsh environment
XGC option	Increases maximum cable length for ground-check monitoring (10km typical)

Accessories

A

SE-CS10 or SE-CS40 Series Ground-Fault Current Transformer
Required zero-sequence current transformer detects ground-fault current.

B

SE-TA6A Series, SE-TA12A Series Termination Assembly
Required termination assembly; temperature compensated.

Specifications

IEEE Device Numbers	Checking or Interlocking Relay (3GC), Ground fault (50G/N, 51G/N)
Input Voltage	65–265 VAC; 85–275 VDC; 18–72 VDC
Dimensions	**H** 213mm **W** 99mm **D** 132mm
Trip Level Settings	0.5–12.5A for SE-CS10, 2–50A for SE-CS40
Trip Time Settings	0.1–2.5s
Contact Operating Mode	Selectable fail- safe or non fail safe
Harmonic Filtering	Standard feature
Test Button	Standard feature
Reset Button	Standard feature
Output Contacts	Isolated Form A and Form B, Two Form C
Approvals	CSA certified, UL Listed (E340889), C Tick (Australia)(3), CE(3)
Conformally Coated	Standard feature
Warranty	5 years
Mounting	Panel, Surface
GC Trip Resistance	28Ω (Standard), 45Ω (XGC Option)

SE-105, SE-107 Series

Trailing Cable Relay

Simplified Circuit Diagram

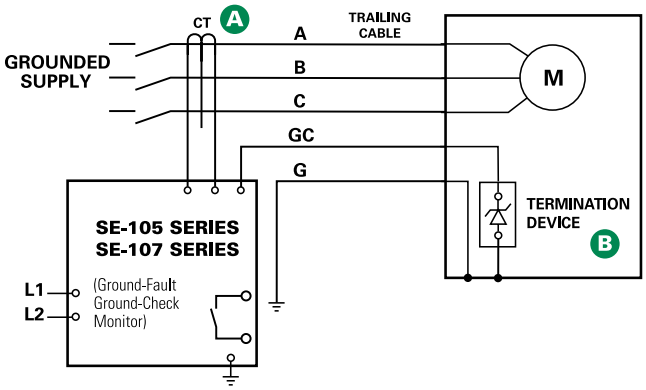

Ordering Information

ORDER NUMBER	POWER SUPPLY
SE-105	120 VAC
SE-105D	120 VAC/VDC
SE-105E	240 VAC
SE-107	120 VAC
SE-107D	120 VAC/VDC
SE-107E	240 VAC

ACCESSORIES	REQUIREMENT
CT200 Series PPI-600V Optional	Required
1N5339B	Included
SE-TA6, SE-TA6-SM	Optional
SE-TA6A Series	Optional
RK-102, RK-105, RK-105I	Optional
RK-13	Optional
PPI-600V	Optional

Description

The SE-105/SE-107 is a combination pilot wire monitor and earth fault relay for resistance earthed systems. It continuously monitors the integrity of the earth conductor to protect portable equipment from hazardous voltages caused by earth faults. The SE-105/SE-107 is an excellent choice for trailing cables 5kV and under in underground mining applications. For higher voltages or long-cable applications, see the SE-134C/SE-135.

Features & Benefits

FEATURES	BENEFITS
Adjustable pickup (0.5, 2.0, 4.0 A)	Unit can be used on a wide variety of trailing cable applications
Adjustable time delay (0.1–2.0 s)	Adjustable trip delay for quick protection and system coordination
Harmonic filter	Prevents false operation
Zener-characteristic termination assembly	Provides reliable ground check loop verification
Fail safe ground check circuit	Ensures ground check circuit remains safe even in the event of equipment failure
Conformal coating	Additional coating protects circuit boards against harsh environment
SE-105: Selectable UV or shunt trip mode	Provides flexibility for different applications
SE-107: UV-trip mode only	Eliminates chance of unauthorised change to trip circuit

Accessories

A

CT200 Series Current Transformer
Required CT detects ground-fault current.

B

1N5339B Termination Device
5W axial-lead ground-check termination; included with SE-105/SE-107.

SE-TA6 Termination Assembly
Optional termination assembly with convenient terminals and mounting holes

SE-TA6-SM Stud-Mount Termination Assembly
Optional 50W ground-check termination that is robust and compact for submersible pumps. Wire lead simplifies installation.

Specifications

IEEE Device Numbers	Checking or Interlocking Relay (3GC), Ground Fault (50G/N, 51G/N)
Input Voltage	See ordering information
Dimensions	**H** 150mm **W** 109mm **D** 100mm
Trip Level Settings	0.5, 2.0, 4.0A
Trip Time Settings	0.1–1.0s
Contact Operating Mode	Selectable fail-safe or non-fail-safe (SE-105) Fail-safe only (SE-107)
Harmonic Filtering	Standard feature
Test Button	Standard feature
Reset Button	Local and remote
Output Contacts	Isolated Form A
Approvals	CSA certified, UL Listed (E340889), C Tick (Australian)
Conformally Coated	Standard feature
Warranty	5 years
Mounting	Surface

FUSECO

PGR-6101 Series

Ground Fault & Insulation Monitor

Description

The PGR-6101 combines the features of a ground fault protection relay and insulation monitor into one unit. It protects against ground faults by monitoring insulation resistance when the motor is de energised and by monitoring ground fault current when the motor is energized. The PGR-6101 features two separate analog outputs for optional current and ohm meters, and two separate alarm relays. It operates on one or three phase solidly grounded, resistance grounded and ungrounded systems up to 6kV.

Features & Benefits

FEATURES	BENEFITS
Adjustable GF pickup (30–200mA)	Trip setting provides a wide range of low level protection and system coordination
Adjustable insulation pickup (60–600 kΩ)	Customizable insulation resistance setpoints for maximum protection
Adjustable time delay (50–250ms)	Adjustable trip delay for quick protection and system coordination
Output contacts	Two Form C output contacts for ground fault and insulation resistance fault
Analog outputs (0–1 mA)	Two analog outputs indicate insulation resistance and ground fault current
CT Loop monitoring	Alarms when CT is not connected
Selectable contact operating mode	Selectable fail safe or non fail safe operating modes allows connection to shunt or undervoltage breaker coil

Simplified Circuit Diagram

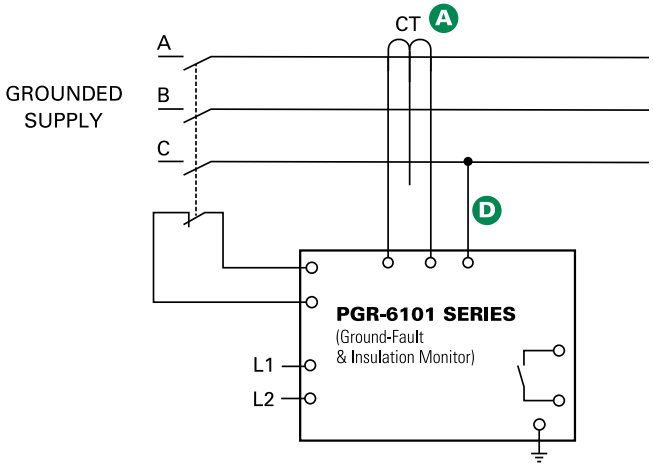

Accessories

PGC-5000 Series Ground Fault Transformers
Required zero sequence current transformer specifically designed for low level detection. Flux conditioner is included to prevent saturation.

PGA-0500 Analog % Current Meter
PGA-0510 Analog Ohm Meter
Optional panel mounted meters display ground fault current as a percentage of the set point and insulation resistance.

PGH Family High Tension Couplers
Required (for systems >1,300 V) PGH Family high tension coupler must be connected between the phase conductor and the PGR-6101.

Ordering Information

ORDER NUMBER	POWER SUPPLY
PGR-6101-120	120 VAC

ACCESSORIES	REQUIREMENT
PGC-5000 Series	Required
PGH Family	Required >1300 V
PGA-0500	Optional
PGA-0510	Optional

Specifications

IEEE Device Numbers	Ground Fault (50G/N, 51G/N), Ground detector (64), Alarm Relay (74)
Input Voltage	120 VAC
Dimensions	**H** 75mm **W** 100mm **D** 115mm
Response delay	< 50ms
Contact Operating Mode	Selectable fail safe or non fail safe
Harmonic Filtering	Standard feature
Test Button	Standard feature
Reset Button	Standard feature
CT Loop Monitoring	Standard feature
Output Contacts	Two Form C
Analog Output	0–1mA
Approvals	UL Listed (E183688)
Warranty	5 years
Mounting	DIN, Surface